SkyView HDX System

Autopilot Servo Installation Manual

Beechcraft Bonanza P35 – V35BTC

Applicable to serial numbers D-6842 through D-10403

103662-000

Revision B

5/8/2019

Copyright © 2019 by Dynon Avionics, Inc.

Dynon grants third parties' permission to print this document

Contact Information

Dynon Avionics, Inc.

19825 141st Place NE

Woodinville, WA 98072

Phone: 425-402-0433

Business Operations: 8:00 AM - 5:00 PM (Pacific Time) Monday - Friday

Technical Support Operations: 7:00 AM - 4:00 PM (Pacific Time) Monday - Friday

Email Sales: sales@dynoncertified.com

Email Support: support@dynoncertified.com

Fax: 425-984-1751

Web: www.dynoncertified.com

Copyright

©2019 Dynon Avionics, Inc. All rights reserved. No part of this manual may be reproduced, copied, transmitted, disseminated or stored in any storage medium, for any purpose without the express written permission of Dynon Avionics. Dynon Avionics hereby grants permission to download a single copy of this manual and of any revision to this manual onto a hard drive or other electronic storage medium to be viewed for personal use, provided that such electronic or printed copy of this manual or revision must contain the complete text of this copyright notice and provided further that any unauthorized commercial distribution of this manual or any revision hereto is strictly prohibited.

Information in this document is subject to change without notice. Dynon Avionics reserves the right to change or improve its products and to make changes in the content without obligation to notify any person or organization of such changes. Visit the Dynon Avionics website (www.dynonavionics.com) for current updates and supplemental information concerning the use and operation of this and other Dynon Avionics products.

Revision History

REV	CHANGE	DATE	APPROVAL
A	Initial Release	5/8/2019	ECO# 323983
B	• Added PN 503560-000 SALES ASSY PMA KIT CLAMP SERVO CAPSTAN 1/8IN to Section 2 Part callout tables, • Revised cascaded Section 2 Part Callout numbers. • Added Step #6 on Page 12 to detail different (5/32” and 1/8” bridle clamps) installations of roll servo. Subsequent steps renumbered. • Revised Figure 8 and added Figure 9 to illustrate different (5/32” and 1/8” bridle clamps) installations of roll servo. Subsequent figures renumbered. • Updated all figures with revised part callout numbers. • Standardized nomenclature and formatting throughout doc, added page # callouts to figure # callouts for installers who prefer using a printed version of document.	5/8/2019	ECO# 327879

References

DOCUMENT
103272-000 SkyView HDX Aircraft Flight Manual Supplement for STC
102949-003 SkyView HDX Pilot's User Guide Dynon Document
103261-000 SkyView HDX Installation Manual for AML STC SA02594SE
43.13-1B Acceptable Methods, Techniques, and Practices - Aircraft Inspection and Repair
43.13-2B Acceptable Methods, Techniques, and Practices - Aircraft Alterations
Beechcraft Bonanza V35B Illustrated Parts Catalog D-4866 through D-9068
Beechcraft Bonanza H35 through V35A-TC Illustrated Parts Catalog D-9069 & AFTER
Beechcraft Bonanza 35 Series Shop Manual D-1 through D-10119

Table of Contents

1 Introduction 1

2 Materials 2

2.1 Roll Servo Materials 2

2.2 Pitch and Yaw Servo Materials 3

3 Autopilot Servo Mounting Bracket Installation 5

3.1 Roll Servo Mounting Bracket Installation 5

3.2 Pitch / Yaw Servo Mounting Bracket Installation 6

4 Servo Electrical Wiring 10

5 Continued Airworthiness 11

5.1 Roll Servo Removal and Installation 11

5.2 Pitch Servo Removal and Installation 13

5.3 Yaw Servo Removal and Installation 15

5.4 Servo Calibration Procedure 16

5.5 Servo Test Procedure 17

6 Figures 18

6.1 Roll Servo Parts and Assemblies 18

6.2 Roll Servo Installation 21

6.3 Pitch / Yaw Servo Parts and Assemblies 27

6.4 Pitch / Yaw Servo Installation 31

1 Introduction

This document provides guidance to retrofit the Dynon SkyView HDX System three-axis autopilot servos into an unmodified Beechcraft Bonanza 35 Series aircraft. Any airplane configurations that include modifications to the areas where these servos are installed are not addressed by this document.

Reference Section 5, *Continued Airworthiness* for autopilot servo removal, installation, calibration, and test procedures.

The SkyView autopilot servo settings are available for download as a configuration file that is loaded into the SkyView HDX System. This file configures the autopilot servo performance settings to meet the applicable certification regulations.

2 Materials

The materials listed below assume installation of the roll, pitch, and yaw servos in an unmodified aircraft.

2.1 Roll Servo Materials

The materials identified in ***Table 1*** are required to install the roll servo into a Beechcraft Bonanza 35 Series aircraft. The item numbers refer to the Figures in Sections 6.1 and 6.2.

***Table 1**: Roll Servo Installation Materials*

ITEM	DYNON P/N	DESCRIPTION	QTY
1	503406-000	SALES ASSY PMA SV42C	1
2	503672-000	ASSY KIT PMA ACCESSORY SERVO CAPSTAN 5/32IN CONTROL CABLE	1
2-1	→100976-011	AN365-1032A NUT LOCK STL #10-32	6
2-2	→100978-003	AN960-10 WASHER FLAT STL #10	6
2-3	→100981-003	AN3H-6A BOLT HEX #10-32 3/4IN DRILLED HEAD	6
2-4	→103694-000	CLAMP CABLE BRIDLE CAPSTAN 5/32 IN	4
2-5	→101113-000	ASSY BRIDLE CABLE SERVO CAPSTAN	1
2-6	→101670-000	ST2-2 SWAGE STOP FOR 1/16IN CABLE	2
3	503540-000	BRACKET ALUM ROLL SERVO BASE BONANZA V35	1
4	503541-000	BRACKET ALUM ROLL SERVO MOUNT BONANZA V35	1
5	101880-000	AN525-832R8 SCREW PHIL WASHER-HEAD STL CAD PLT #8-32 1/2IN	3
6	101867-004	AN525-10R8 SCREW WASHER HEAD STL CAD PLT #10-32	1
7	100981-000	AN3H-3A BOLT HEX #10-32 DRILLED HEAD	3
8	100979-002	MS35333-39 WASHER LOCK STAR INT STL #10	3
9	100978-003	AN960-10 WASHER FLAT STL #10	4
10	100976-011	AN365-1032A NUT LOCK STL #10-32	1
11	101877-000	RIVETS CHERRY N CCP-42	3
12	503560-000	SALES ASSY PMA SERVO CAPSTAN CLAMP KIT 1/8IN CONTROL CABLE	1
12-1	→103693-000	CLAMP CABLE BRIDLE CAPSTAN 1/8 IN	2
12-2	→100976-011	AN365-1032A NUT LOCK STL #10-32	2

ITEM	DYNON P/N	DESCRIPTION	QTY
12-3	→100978-003	AN960-10 WASHER FLAT STL #10	2
12-4	→100981-003	AN3H-6A BOLT HEX #10-32 3/4IN DRILLED HEAD	2

NOTE: ARROW (→) INDICATES ITEMS PACKAGED WITHIN A SALES ASSEMBLY

2.2 Pitch and Yaw Servo Materials

The materials identified in ***Table 2*** are required to install the pitch servo into a Beechcraft Bonanza 35 Series aircraft. The item numbers refer to the Figures in Section 6.3 and 6.4.

***Table 2**: Pitch and Yaw Servo Installation Materials*

ITEM	DYNON P/N	DESCRIPTION	QTY
13	503406-000	SALES ASSY PMA SV42C (YAW SERVO)	1
14	503672-000	ASSY KIT PMA ACCESSORY SERVO CAPSTAN 5/32IN CONTROL CABLE	1
14-1	→100976-011	AN365-1032A NUT LOCK STL #10-32	6
14-2	→100978-003	AN960-10 WASHER FLAT STL #10	6
14-3	→100981-003	AN3H-6A BOLT HEX #10-32 3/4IN DRILLED HEAD	6
14-4	→103694-000	CLAMP CABLE BRIDLE CAPSTAN 5/32IN	4
14-5	→101113-000	ASSY BRIDLE CABLE SERVO CAPSTAN	1
14-6	→101670-000	ST2-2 SWAGE STOP FOR 1/16IN CABLE	2
15	503679-000	SALES ASSY PMA SV32C-150 (PITCH SERVO)	1
16	503674-000	ASSY KIT PMA ACCESSORY SERVO CAPSTAN 1/8IN CONTROL CABLE	1
16-1	→100976-011	AN365-1032A NUT LOCK STL #10-32	4
16-2	→100978-003	AN960-10 WASHER FLAT STL #10	4
16-3	→100981-003	AN3H-6A BOLT HEX #10-32 3/4IN DRILLED HEAD	4
16-4	→103693-000	CLAMP CABLE BRIDLE CAPSTAN 1/8 IN	4
16-5	→101113-000	ASSY BRIDLE CABLE SERVO CAPSTAN	1
16-6	→101670-000	ST2-2 SWAGE STOP FOR 1/16IN CABLE	2
17	503542-000	MOUNT PLATE ALUM PITCH SERVO BONANZA V35	1
18	503544-000	BRACKET ALUM MOUNT PITCH SERVO BONANZA V35	1

ITEM	DYNON P/N	DESCRIPTION	QTY
19	503546-000	BRACKET ALUM MOUNT YAW SERVO BONANZA V35	1
20	503550-000	BRACE ALUM ANGLE AFT PITCH/YAW SERVO BONANZA V35B	1
21	503549-000	BRACE ALUM ANGLE FORWARD PITCH/YAW SERVO BONANZA V35B	1
22	503547-000	BRACKET ALUM MOUNT TOP PITCH YAW SERVO BONANZA V35B	1
23	101880-006	AN525-832R10 SCREW WASHER HEAD #8-32	10
24	100978-002	AN960-08 WASHER FLAT STL #8	14
25	100976-007	AN365-832A NUT LOCK STL #8-32	10
26	100981-000	AN3H-4A BOLT HEX #10-32 DRILLED HEAD	8
27	100979-002	MS35333-39 WASHER LOCK STAR INT STL #10	8
28	100978-003	AN960-10 WASHER FLAT STL #10	14
29	103673-006	MS24694-S52 SCREW PHIL 100DEG STL CAD PLT #10-32 21/32IN L	6
30	100976-011	AN365-1032A NUT LOCK STL #10-32	6
31	103676-003	MS35206-244 SCREW PHIL PAN STL CAD PLT #8-32 7/16IN L	4

NOTE: ARROW (→) INDICATES ITEMS PACKAGED WITHIN A SALES ASSEMBLY

3 Autopilot Servo Mounting Bracket Installation

The instructions that follow detail how to permanently install the brackets that mount the roll, pitch, and yaw servo mounting bracketry into the airplane.

3.1 Roll Servo Mounting Bracket Installation

This section details how to assemble and install the roll servo mounting brackets.

The roll servo base bracket mounts directly to the airplane. The roll servo mount bracket has the roll servo fastened to it, and it is then is fastened to the base bracket. The roll servo is connected to the aileron control cables by a bridle cable and bridal cable clamps.

Refer to Section 4 *Servo Electrical Wiring* for servo wiring information.

Refer to Section 5 *Continued Airworthiness* to remove or install a roll servo after the bracket installation is complete.

NOTE: Before installing the roll servo, verify that the aileron flight control cables are rigged and tensioned according to the manufacturer's specifications.

3.1.1 Location and Access

The roll servo is located on the left cabin sidewall just forward of the rear spar, approximately STA187 as indicated in Figure 4 (Page 21).

This location is accessed by removing the front and rear seats, the rear spar cover assembly, and the left-hand upholstery sidewall. Additionally, it may be necessary to open the left main landing gear inner gear door to access the wheel well. Refer to the *Beechcraft Bonanza 35 Series Shop Manual* to accomplish the removal of interior parts and components, as well as the opening of the inner gear door.

3.1.2 Roll Servo Base Bracket Installation

Complete the following steps to install the roll servo mounting brackets:

1) Remove the 4 fasteners mounting the forward end of the left outboard seat rail to the forward seat support structure.
2) Remove the 2 fasteners mounting the middle of the left outboard seat rail to the rear spar carry-through structure.
3) Place the roll servo base bracket as shown in Figure 4 (Page 21) and Figure 5 (Page 22) so that:
    a) The aft edge rests on the rear spar carry-through structure,
    b) The inboard edge slides between the left outboard seat attach rail and the rail support structure below,
    c) The vertical outboard attach flange contacts the forward side of the sidewall structure it will attach to,

d) The holes in the roll servo base bracket align with the mounting holes already located in the structure.

When satisfied with the fit, refer to Figure 5 (Page 22) and Figure 6 (Page 23), and do the following steps:

1) Install the base bracket using the fasteners removed earlier.
2) Drill three #40 size holes in the structure using the existing pilot holes on the forward vertical flange as a guide, and temporarily fasten.
3) Drill the #40 holes up to #30 size.
4) Install three 1/8-inch blind rivets into the holes.

3.1.3 Roll Servo Mount Bracket Installation

Refer to Section 5 *Continued Airworthiness* for instructions on how to:

1) Install the roll servo into the roll servo mount bracket,
2) Install the roll servo mount assembly into the roll servo base bracket (after the roll servo base bracket installation is complete).

3.2 Pitch / Yaw Servo Mounting Bracket Installation

This section assembles and installs the combined pitch and yaw servo mounting brackets.

The pitch servo and yaw servo mounting brackets are fastened together by the installer to create the pitch/yaw servo mount bracket assembly. This assembly is then fit and fastened into the airplane. Then the bracket assembly receives its top bracket and two stabilizing angle braces. The pitch servo is then fastened to the right-hand pitch servo bracket, and the yaw servo is fastened to left-hand yaw servo bracket.

Both the pitch and yaw servos are connected to the elevator and rudder control cables by bridle cables and bridle cable clamps.

Refer to Section 4 *Servo Electrical Wiring* for servo wiring information.

Refer to Section 5 *Continued Airworthiness* to remove or install a pitch or yaw servo after the bracket installation is complete.

3.2.1 Location and Access

The Beechcraft Bonanza 35 pitch and yaw servos are accessed from the baggage area and are located behind the STA170 access panel, between frames STA179 and STA207, as shown in Figure 14 (Page 31).

Remove the STA170 access panel according to the *Beechcraft Bonanza 35 Series Shop Manual*, to access the pitch/yaw servo installation location.

3.2.2 Pitch/Yaw Servo Mount Bracket Assembly

Reference Figure 15 (Page 32), and accomplish the following steps to create the servo mount assembly:

1) Fasten the pitch servo mount to the base plate.
2) Fasten the yaw servo mount to the base plate.
3) DO NOT attach the top bracket to the assembly.

3.2.3 Pitch/Yaw Servo Mount Bracket Installation

Accomplish the following steps to locate the servo bracket assembly in the airplane:

1) Holding the assembly sideways so that the base plate is approximately vertical (Figure 16, Page 33, Step #1), pass the assembly from one side of the control cables so that the cables enter the space between the two servo mount brackets (Figure 16, Step #2).
2) Rotate the assembly about the control cables so that the base plate becomes approximately horizontal (Figure 16, Step #3).
3) Place the assembly on the rivet shop heads mounting the attach flanges of the two inboard stringers mounted to the belly skin (Figure 16, Step #4).
4) Reference Figure 17 (Page 34) and Figure 18 (Page 35) to locate the assembly, adjusting it forward or aft as required to meet the following requirements:
   a) The assembly shall rest on the lower flanges of the inboard stringers between approximately 12 and 12.5 inches behind the STA179 frame. Movement within this range may be necessary to meet all requirements.
   b) The base plate shall cover a minimum of three skin to stringer attach fastener locations on both the left and right side.
   c) The base plate shall maintain a minimum edge margin of 0.25 inches from both the forward and aft edges to the center of the last fastener hole in the row, unless more than three fasteners are captured by the base plate.
   d) If more than three fasteners are captured by the base plate, then the base plate should maintain a minimum edge margin of 0.25 inches to the center of the fastener hole in the row from one of the forward or aft edges, but not necessarily both.

      NOTE: It is acceptable to trim material from the forward and aft edge of the base plate to avoid partial contact with skin/stringer fasteners, providing all the above requirements have been met.

   e) The base plate shall avoid the radius of stringers vertical flange on both the left and right sides by maintaining a gap of 0.125 inches.

      NOTE: It is acceptable to trim material from the left and or right edges of the base plate in order to meet all the above requirements.
5) When satisfied with the positioning, identify the rivets to be removed from the skin and stringers to attach the pitch/yaw servo mount assembly to the skin and stringers.
6) Move the assembly clear of the rivet removal area.

7) Drill out the rivets affected by the mount bracket installation.
8) Replace the assembly into its intended position,
9) Using a #30 drill, back drill the base plate using the skin/stringer holes as a guide, temporarily fastening as you go.
10) Drill the skin/stringer/base plate holes up to the final hole size of #21.
11) Disassemble and deburr the newly drilled holes in all parts.
12) Reassemble the parts, and permanently fasten the assembly to the skins and stringers as shown in Figure 19 (Page 36).

3.2.4 Pitch/Yaw Servo Mount Stabilization Angle Bracket Installation

Referencing Figure 23 (Page 40), complete the following steps to install the forward angle bracket:

1) Temporarily fasten the forward angle brace to the pitch servo mount
2) Allow the forward/lower end of the angle to rest on the right-hand inboard stringer attach flange.
3) Identify the best fastener to remove that will attach the bracket maintaining minimum hole edge margin of 0.25 inches from the center of the fastener hole.
4) Drill out the rivet.
5) Using a #30 drill, back drill the base plate using the skin/stringer holes as a guide.
6) Drill the skin/stringer/angle bracket holes up to the final hole size of #21.
7) Fasten the forward end of the angle to the skins and stringers as shown.

Referencing Figure 23 (Page 40), complete the following steps to install the aft angle bracket:

1) Temporarily fasten the aft angle brace to the pitch servo mount
2) Allow the aft/lower end of the angle to rest on the right-hand inboard stringer attach flange.
3) Identify the best stringer attaching rivet to remove that will attach the bracket while maintaining minimum hole edge margins of 0.25 inches.
4) Drill out the rivet.
5) Using a #30 drill, back drill the base plate using the skin/stringer holes as a guide.
6) Drill the skin/stringer/angle bracket holes up to the final hole size of #21.
7) Fasten the forward end of the angle to the skins and stringers as shown.

Refer to Section 5.2 *Pitch Servo Removal and Installation* for instructions on how to install the pitch servo into the pitch servo mount bracket (after the pitch servo mount bracket installation is complete).

Refer to Section 5.3 *Yaw Servo Removal and Installation* for instructions on how to install the yaw servo into the yaw servo mount bracket (after the yaw servo pitch servo mount bracket installation is complete).

4 Servo Electrical Wiring

For the complete wiring and network configuration instructions, refer to the following documents:

- *Dynon SkyView HDX System Installation Manual for AML STC SA02594SE*; Document 103261-000, Section 11 *Autopilot Servo Installation, Configuration, and Calibration*.
- *Wiring Diagram Typical, HDX Dual Display*; Document 103488-000

Route the servo electrical harnesses through the airframe structure as appropriate. Take precautions to prevent the servo harnesses from chafing or interfering with the aircrafts flight controls or other moving components.

NOTE: Servo power and the autopilot disconnect circuits are required to be separate from the signal and power circuits provided over the SkyView network. The servos should receive power from a common power source with circuit protection sized for the loads associated with all servos.

Terminate the servo network electrical harnesses with a D9 connector shell with female pins.

Terminate the servo electrical harness pigtails with the mating D9 connector.

Dynon provides the SV-NET-SERVO Network Autopilot Servo Cable Kit (p/n 101342-020) to aid in wiring the servos. Contact Dynon Sales for more information.

NOTE: Power for all servos must be controlled by a switch prominently mounted on the instrument panel. This provides the pilot the ability to quickly turn off power to the servos should it be needed.

5 Continued Airworthiness

5.1 Roll Servo Removal and Installation

5.1.1 Location and Access

The roll servo is located on the left cabin sidewall just forward of the rear spar approximately STA187 as indicated in Figure 4 (Page 21).

This location is accessed by removing the front and rear seats, the rear spar cover assembly, and the left-hand upholstery sidewall. Additionally, it may be necessary to open the left main landing gear inner gear door to access the wheel well. Refer to the *Beechcraft Bonanza 35 Series Shop Manual* to accomplish the removal of interior parts and components, as well as the opening of the inner gear door.

5.1.2 Roll Servo Removal

The roll servo attaches to the servo mounting bracket. The servo mounting bracket in turn attaches to the servo base bracket which is permanently attached to the airframe. Follow these steps to remove the roll servo mounting bracket from the roll servo base bracket:

1) Remove the bridal cable clamps from the aileron control cables. It is recommended that you mark the location of the cable clamps for ease of re-installation.
2) Disconnect the D9 harness connector from the servo.
3) Remove the fasteners securing the roll servo mounting bracket assembly to the base bracket (Figure 7, Page 24) and retain for re-installation.
4) Remove the roll servo mounting bracket assembly from the airplane.

To remove the roll servo from the roll servo mount bracket assembly:

1) Remove the safety wire and unfasten the hardware securing the servo to the roll servo mounting bracket (Figure 3, Page 20),
2) Remove the servo from the mount bracket.

5.1.3 Roll Servo Installation

Prepare the airplane for the servo installation by:

1) Securing the ailerons and/or yoke in the neutral position.
2) Ensuring that the aileron control cables in the areas that the bridal cable clamps will attach are clean and free of dirt and grease before installing cable clamps.

To install the SV42C Servo into the roll servo mount bracket (Figure 3, Page 20), complete the steps that follow:

1) Place the servo into the mount bracket.
2) Install the hardware.
3) Torque the servo bolts to between 15 to 20-inch pounds.

4) Safety wire the servo bolts.

Complete the following steps to load the bridal cable onto the servo capstan:

1) Rotate the servo capstan so that the swage hole is facing directly aft.
2) Pass one end of the bridal cable underneath one of the cable guard flanges so that the cable will sit in the center groove.
3) Set the cable swage into its accompanying hole in the pulley and pass the other end of the bridle cable under the opposite flange.
4) Feed both cable ends around the pulley and underneath the next set of cable guard flanges following the grooves. When complete, the cable will have wrapped the capstan one complete turn.

To install the roll servo mount bracket assembly, as shown in Figure 3 (Page 20) and Figure 7 (Page 24), complete the steps that follow:

1) Holding the capstan so that the hole for the swage cable remains facing aft, insert the roll servo mount bracket assembly up and into the roll servo base bracket from below.
2) Align the base and mount bracket mounting holes, and then fasten with hardware.
3) Assemble clamps onto the cables and position, as shown in Figure 8 (Page 25). The grooves in the cable clamps are designed to work with the provided bridle cable diameter (small groove) and aircraft control cable (large grooves).
4) The outboard bridal clamp installation area is in the left main gear wheel well, accessed via the left main gear inner door.
5) The inboard bridal clamp installation area is near the turnbuckle connecting the left aileron balance cable with the center aileron balance cable.
6) If this is a new installation, consider the following:
   a. If the bridal cable can be clamped to the aileron balance cable inboard of the balance cable turnbuckle, install the bridal cable to the center balance cable using the 1/8” bridal cable clamp, as shown in Figure 8 (Page 25).
   b. If the bridal cable can be clamped to the aileron balance cable outboard of the balance cable turnbuckle, install the bridal cable to the center balance cable using the 5/32” bridal cable clamp, as shown in Figure 9 (Page 26).
7) If this is a reinstallation, locate the clamps at the locations marked during removal.
8) The capstan cables should be tensioned to 15 ± 2 pounds.
9) Secure the cable clamp bolts and torque to 35 ± 5-inch pounds.
10) Verify full travel of the aileron using the control yoke. The bridle clamps must not contact cable pulleys or structure during the entire travel.
11) The capstan should never rotate more than 150 degrees in either direction from neutral.

12) When satisfied that the installation is complete, install a stop-swage to each end of the bridal cable 0.25 inches beyond the bridal cable clamp assembly.
13) Trim the remainder of the bridal cable extending beyond the stop-swage.
14) If introducing a servo with a new serial number to the network, refer to *Dynon SkyView HDX System Installation Manual for AML STC SA02594SE*; Document 103261-000, Section 3.4.6 *Network Setup and Status*.
15) Refer to Section 5.4 *Servo Calibration Procedure* to recalibrate the autopilot servos.

5.2 Pitch Servo Removal and Installation

5.2.1 Location and Access

The Beechcraft Bonanza 35 pitch and yaw servos share a common mounting bracket assembly in the aft fuselage behind the baggage area between frames STA179 and STA207, as shown in Figure 14 (Page 31).

Remove the STA170 access panel according to the Beechcraft Bonanza 35 Series Shop Manual, to access the Pitch/Yaw Servo installation location.

5.2.2 Removal

The pitch servo mounts on the right-hand side of the pitch/yaw servo bracket assembly. Complete these steps to remove the pitch servo from its mounting bracket:

1) Remove the fasteners attaching the pitch servo bridal cable clamps to the control cables. It is recommended that you mark the location of the cable clamps for ease of re-installation.
2) Disconnect the D9 harness connector from the servo.
3) Remove the pitch/yaw top bracket from the pitch/yaw servo bracket assembly (Figure 22, Page 39).
4) Cut the safety wire and remove the fasteners attaching the pitch servo from pitch servo mounting bracket (Figure 20, Page 37).
5) Remove the servo from the bracket by moving it inboard and out the top.
6) Temporarily replace the pitch/yaw top bracket if desired.

5.2.3 Installation

Ensure that the ruddervator flight control cable tensions are within limits and are rigged to manufacturer's specifications.

Complete these steps to install the pitch servo to its mounting bracket:

1) If installed, remove the pitch/yaw top bracket from the pitch/yaw servo bracket assembly (Figure 22, Page 39).
2) Fasten the servo into the pitch servo bracket.

3) Torque the servo bolts to between 15 to 20-inch pounds,
4) Safety wire the servo mounting fasteners to prevent them from loosening. Safety wire securing holes are provided in the brackets near each fastener location.
5) Secure the ruddervator in the neutral position.
6) Ensure that the elevator cables are clean and free of dirt and grease in the area to which the bridal cable clamps will attach.
7) Pass one end of the bridal cable underneath one of the cable guard flanges so that the cable will sit in the center groove. Set the cable swage into its accompanying hole in the pulley and pass the other end of the bridle cable under the opposite flange. Feed both cable ends around the pulley and underneath the next set of cable guard flanges following the grooves. When complete, the cable will have wrapped the capstan one complete turn.
8) Rotate the servo capstan so that the hole for the cable swage is facing UP.
9) Assemble clamps onto the cables and position as shown in Figure 24 (Page 41). The grooves in the cable clamps are designed to work with the provided bridle cable diameter of 1/16” (small groove) and aircraft control cable diameter of 1/8” (large grooves).
10) If this is a reinstallation, locate the clamps at the locations marked during removal.
11) The capstan cables should be tensioned to 15 ± 2 pounds.
12) Secure the cable clamp bolts and torque to 35 ± 5-inch pounds.
13) Verify full travel of the ruddervator elevator function using the control yoke. The bridle clamps must not contact any part of the structure during the entire travel.
14) The capstan should never rotate more than 150 degrees in either direction from neutral.
15) When satisfied that the installation is complete, install a stop-swage to each end of the bridal cable about 1” beyond the bridal cable clamp assembly.
16) Trim the remainder of the bridal cable extending beyond the stop-swage.
17) Install the Pitch/Yaw Top Bracket onto the Pitch/Yaw Servo Bracket Assembly (Figure 22, Page 39).
18) If introducing a servo with a new serial number to the network, refer to *Dynon SkyView HDX System Installation Manual for AML STC SA02594SE*; Document 103261-000, Section 3.4.6 *Network Setup and Status*.
19) Refer to Section 5.3 *Servo Calibration Procedure* to recalibrate the autopilot servos.

5.3 Yaw Servo Removal and Installation

5.3.1 Location and Access

The Beechcraft Bonanza 35 pitch and yaw servos share a common mounting bracket assembly in the aft fuselage behind the baggage area between frames STA179 and STA207, as shown in Figure 14 (Page 31).

Remove the STA170 access panel according to the *Beechcraft Bonanza 35 Series Shop Manual*, to access the pitch/yaw servo installation location.

5.3.2 Removal

The yaw servo mounts on the left-hand side of the pitch/yaw servo bracket assembly. Referencing Figure 21 (Page 38), complete these steps to remove the yaw servo from its mounting bracket:

1) Remove the fasteners attaching the yaw servo bridal cable clamps to the control cables. It is recommended that you mark the location of the cable clamps for ease of re-installation.
2) Disconnect the D9 harness connector from the servo.
3) Cut the safety wire and remove the fasteners attaching the yaw servo to the yaw servo mounting bracket.
4) Remove the servo from the bracket.

5.3.3 Installation

Ensure that the ruddervator flight control cable tensions are rigged to and within the limits of manufacturer's specifications.

Follow these steps to install the yaw servo to its mounting bracket:

1) Fasten the servo into the yaw servo bracket (Figure 21, Page 38).
2) Torque the servo bolts to between 15 to 20-inch pounds.
3) Safety wire the servo mounting fasteners to prevent them from loosening.
4) Secure the ruddervator in the neutral position.
5) Ensure that the ruddervator rudder function cables are clean and free of dirt and grease in the area to which the bridal cable clamps will attach.
6) Pass one end of the bridal cable underneath one of the cable guard flanges so that the cable will sit in the center groove. Set the cable swage into its accompanying hole in the pulley and pass the other end of the bridle cable under the opposite flange. Feed both cable ends around the pulley and underneath the next set of cable guard flanges following the grooves. When complete, the cable will have wrapped the capstan one complete turn.
7) Rotate the servo capstan so that the cable swage hole is facing UP.

8) Assemble clamps onto the cables and position, as shown in Figure 24. The grooves in the cable clamps are designed to work with the provided bridle cable diameter of 1/16" (small groove) and aircraft control cable diameter of 1/8" (large grooves).
9) If this is a reinstallation, locate the clamps at the locations marked during removal.
10) The capstan cables should be tensioned to 15 ± 2 pounds.
11) Secure the cable clamp bolts and torque to 35-inch pounds ± 5-inch pounds.
12) Verify full travel of the elevator using the control yoke. The bridle clamps must not contact any part of the structure during the entire travel.
13) The capstan should never rotate more than 150 degrees in either direction from neutral.
14) When satisfied that the installation is complete, install a stop-swage to each end of the bridal cable 0.25 inches beyond the bridal cable clamp assembly.
15) Trim the remainder of the bridal cable extending beyond the stop-swage.
16) If introducing a servo with a new serial number to the network, refer to *Dynon SkyView HDX System Installation Manual for AML STC SA02594SE*; Document 103261-000, Section 3.4.6 *Network Setup and Status*.
17) Refer to Section 5.4 *Servo Calibration Procedure* to recalibrate the autopilot servos.

5.4 Servo Calibration Procedure

Servo calibration cannot be performed without:

- An SV-ADAHRS-200 installed and configured in the SkyView network.
- All servos installed and configured in the SkyView network.
- V-speeds correctly entered in SkyView HDX.

To make servos visible on SkyView HDX, Configure the SkyView network (SYSTEM SETUP > NETWORK SETUP > CONFIGURE).

To calibrate the servos, enter the Servo Calibration Wizard (SETUP MENU > HARDWARE CALIBRATION > AP SERVO CALIBRATION > CALIBRATION) and follow the onscreen instructions to calibrate the servo(s).

NOTE: Hold the rudder pedals centered in yaw during the pitch and roll portion of the calibration or the calibration will fail. This prevents the yaw servo from moving when performing the pitch and roll servo portion of the calibration.

NOTE: Hold the control yoke centered in pitch and roll during the yaw portion of the calibration or the calibration will fail. This prevents the pitch and roll servo from moving when performing the yaw servo portion of the calibration.

SkyView HDX checks the status of the AP Disengage Button. If SkyView HDX detects that the button is pressed (the input is grounded) upon entering AP SERVO CALIBRATION, the AP

Disengage Button is assumed to be stuck (or incorrectly installed), resulting in the following message being displayed, and the AP SERVO CALIBRATION is aborted:

“The servo disconnect switch appears to be pressed and may be installed incorrectly. The servo disconnect switch should be a type Momentary, Push Button Normal Open (PBNO). Press cancel below to return to the servo calibration menu.”

If the servo calibration procedure is successful, SkyView HDX will automatically instruct you to run the servo test procedure. Refer to Section 5.5 *Servo Test Procedure* to test the servo.

5.5 Servo Test Procedure

The servo test procedure requires a successful servo calibration. The servo test procedure verifies that each servo is configured properly by moving the control surfaces while the installer verifies the correct movement. You may run this procedure on its own at any time after a successful servo calibration. SkyView will not display AP status on the Top Bar until after this test procedure is successfully completed.

To run this procedure on its own (after a successful servo calibration procedure), enter the Servo Test Wizard (SETUP MENU > HARDWARE CALIBRATION > AP SERVO CALIBRATION > TEST) and follow the onscreen instructions to test the servo(s).

6 Figures

6.1 Roll Servo Parts and Assemblies

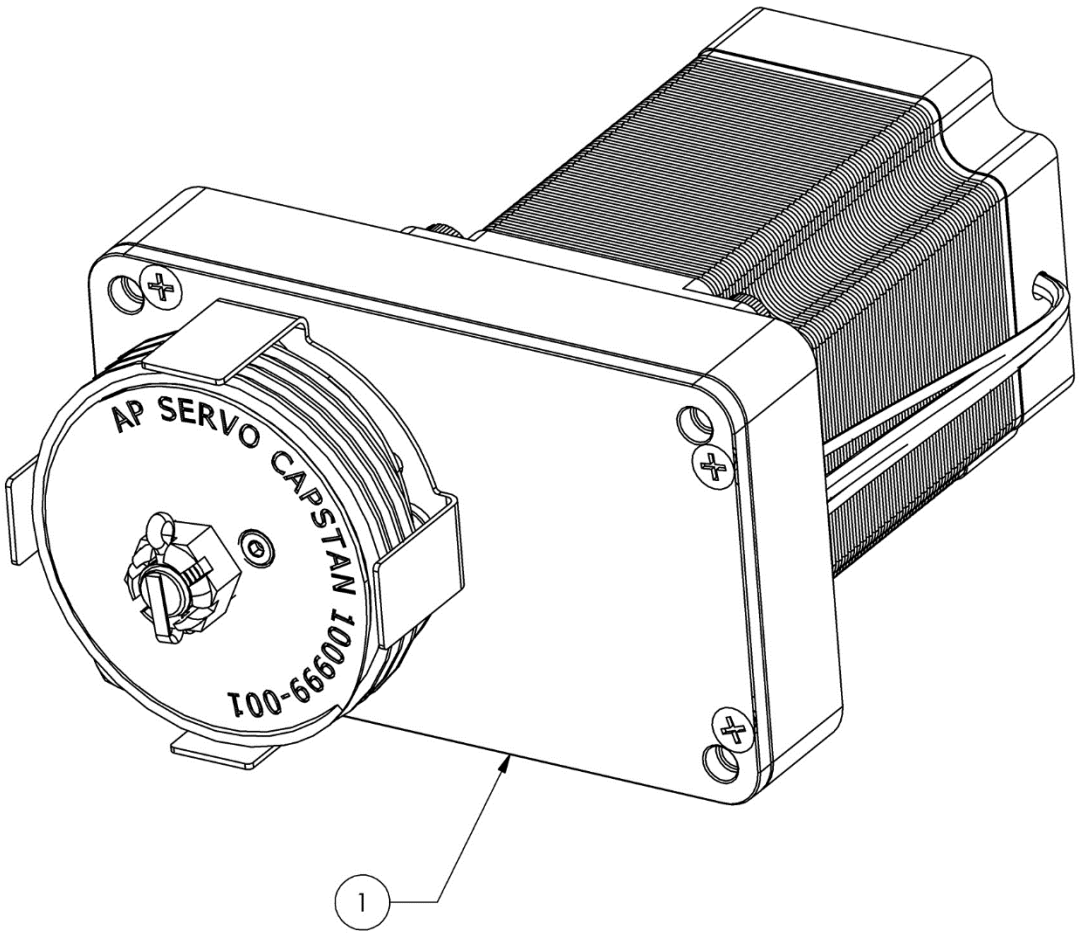

Figure 1: Dynon SV42C Roll Servo Assembly

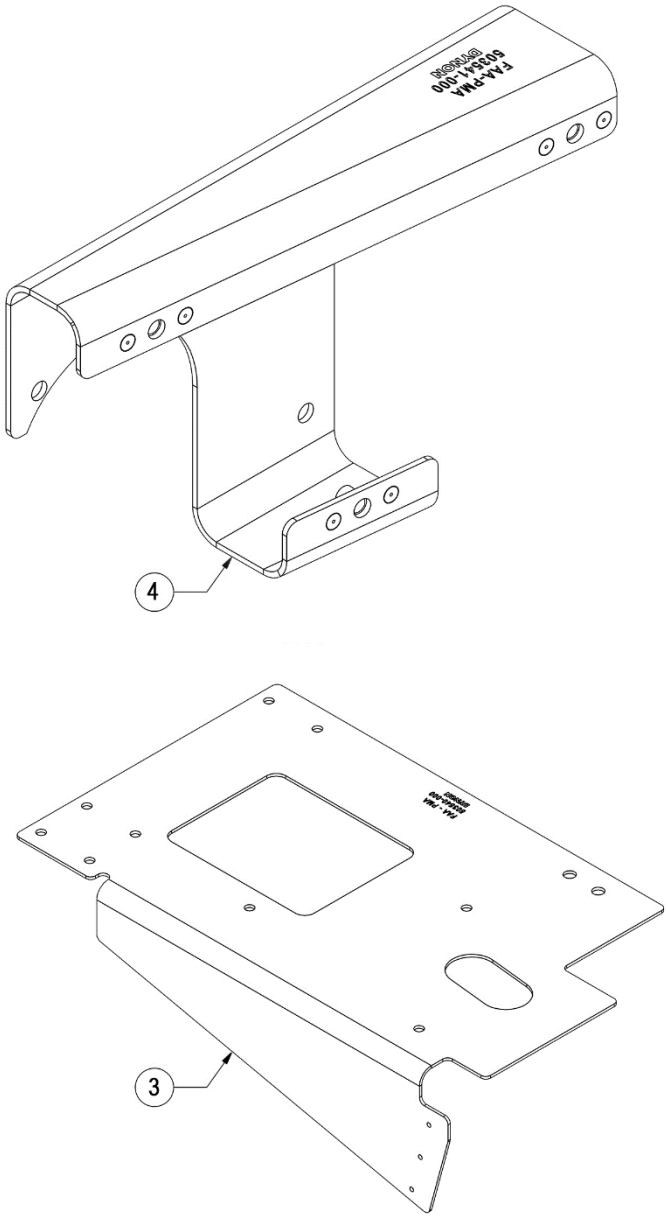

Figure 2: Roll Servo Brackets

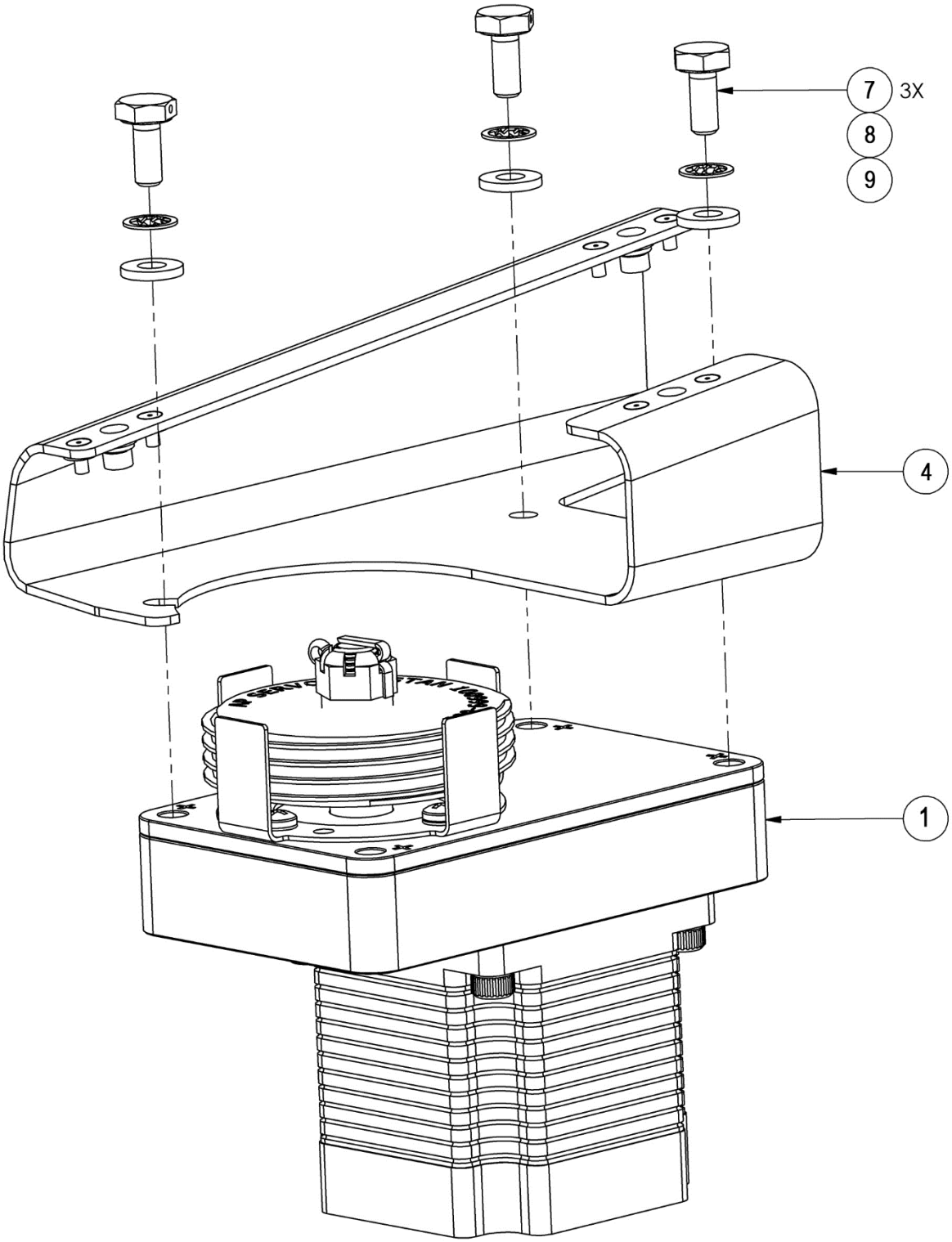

Figure 3: Roll Servo Mount Bracket Assembly

6.2 Roll Servo Installation

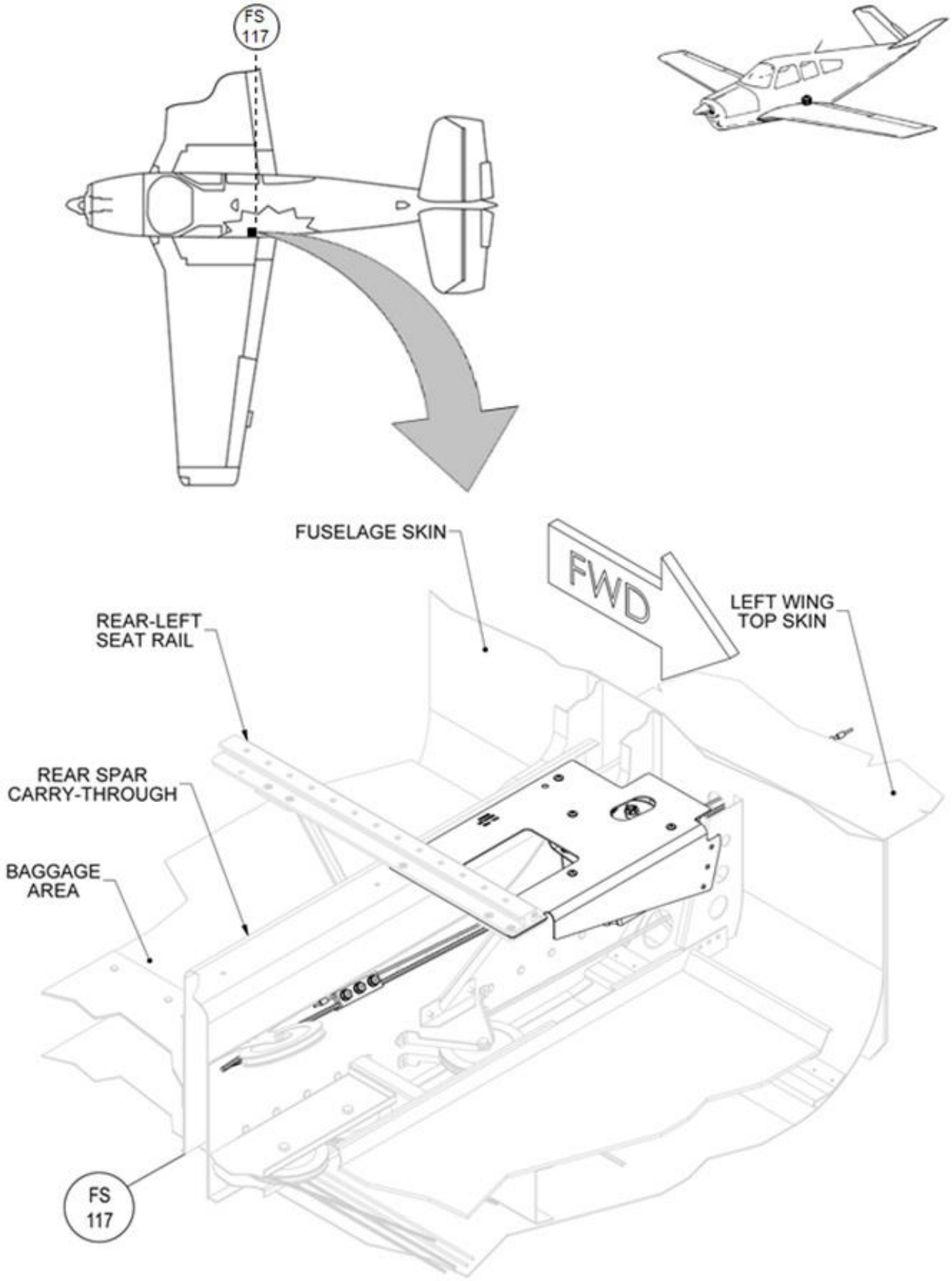

Figure 4: Roll Servo Installation Location

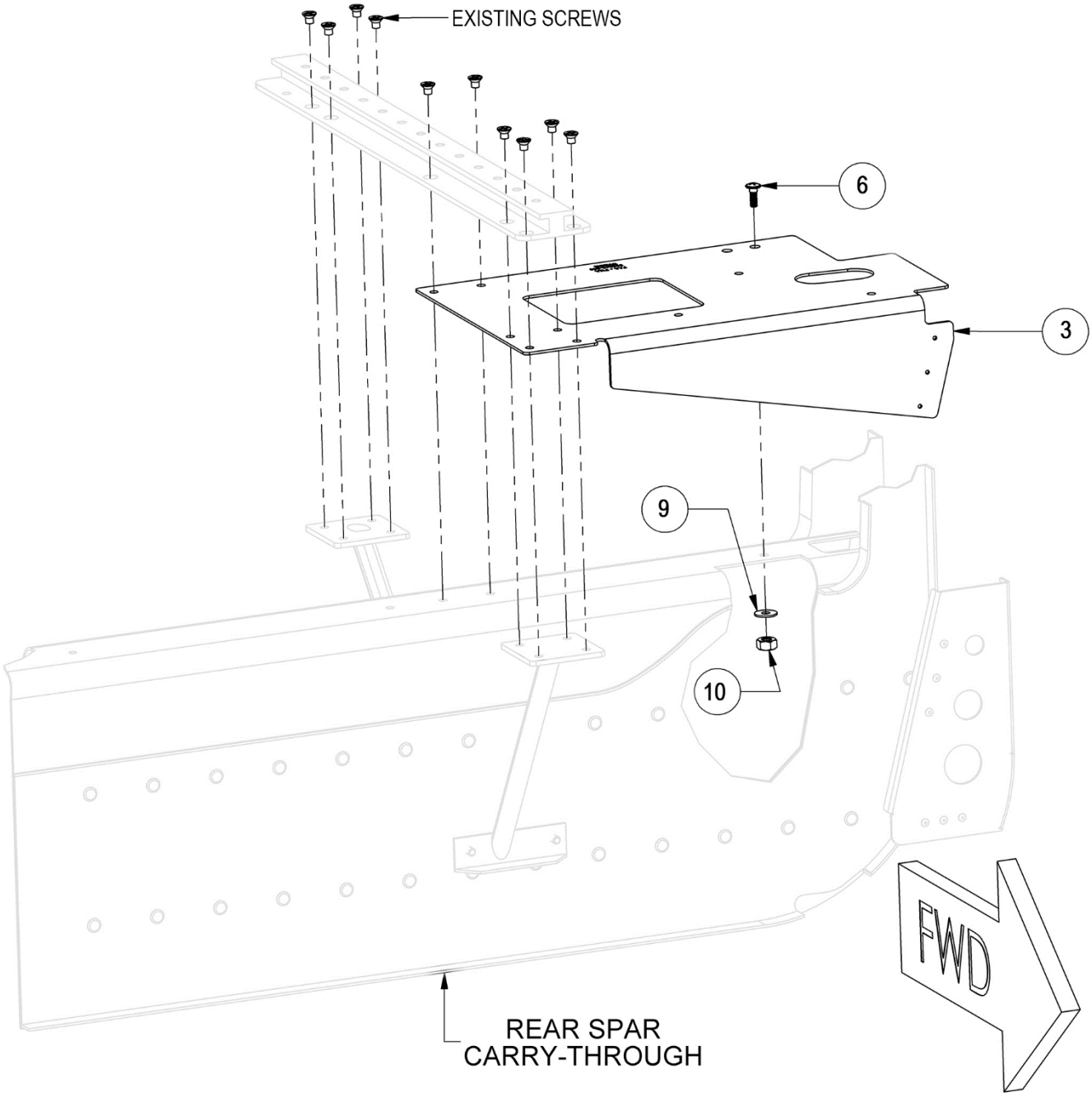

Figure 5: Roll Servo Base Bracket Installation—Rear Spar

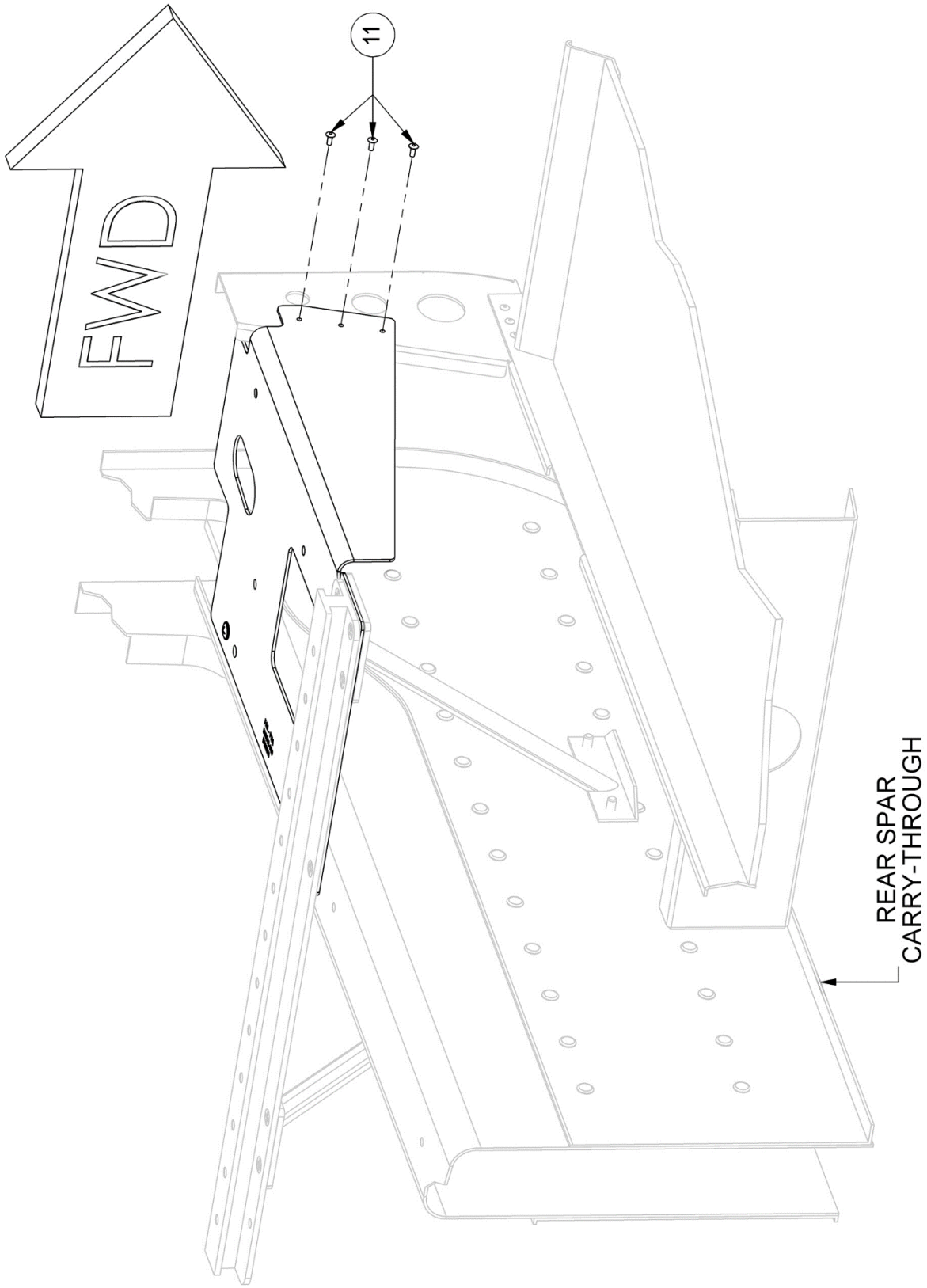

Figure 6: Roll Servo Base Bracket Installation—Forward Brace

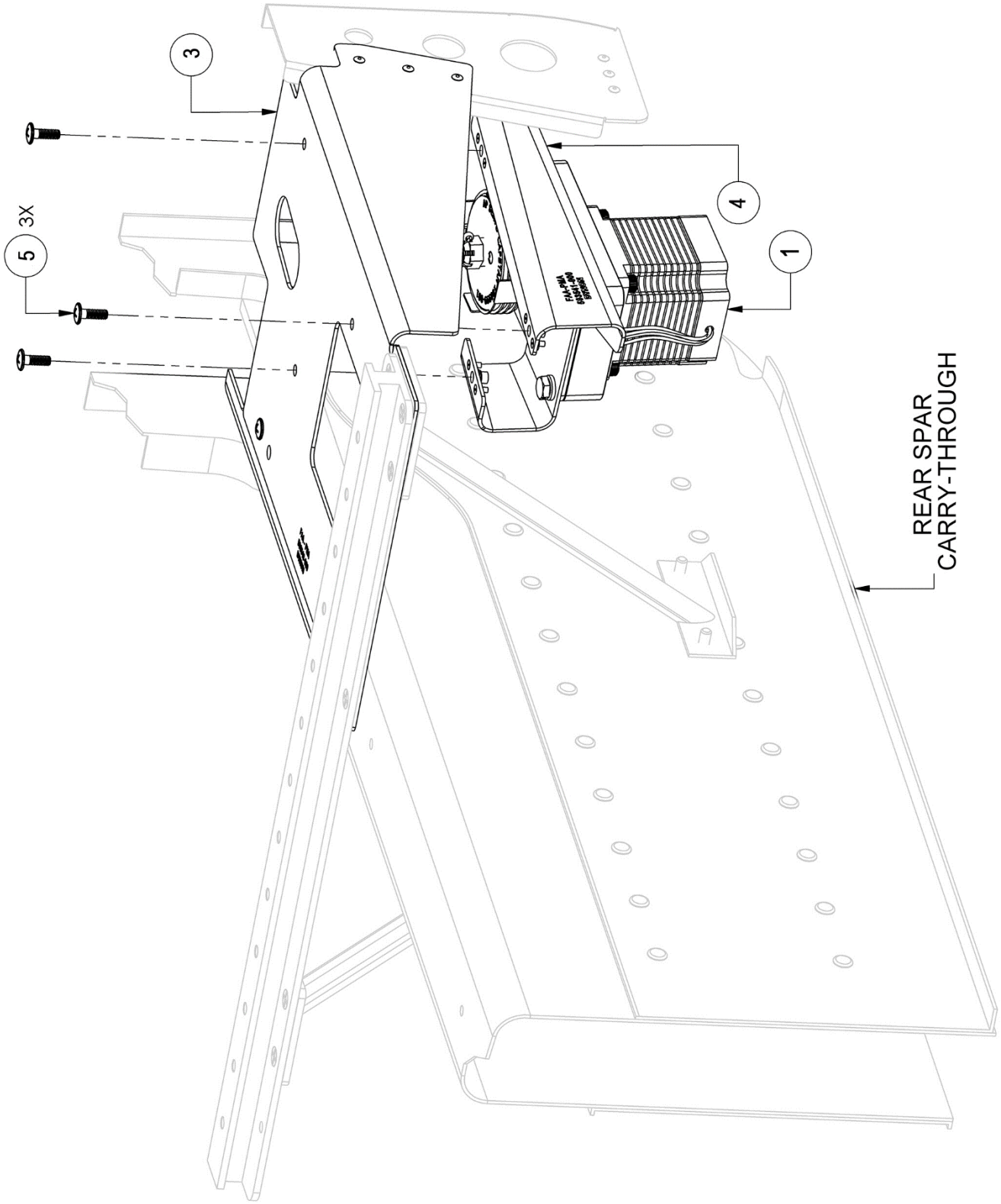

Figure 7: Roll Servo Mount Bracket Installation

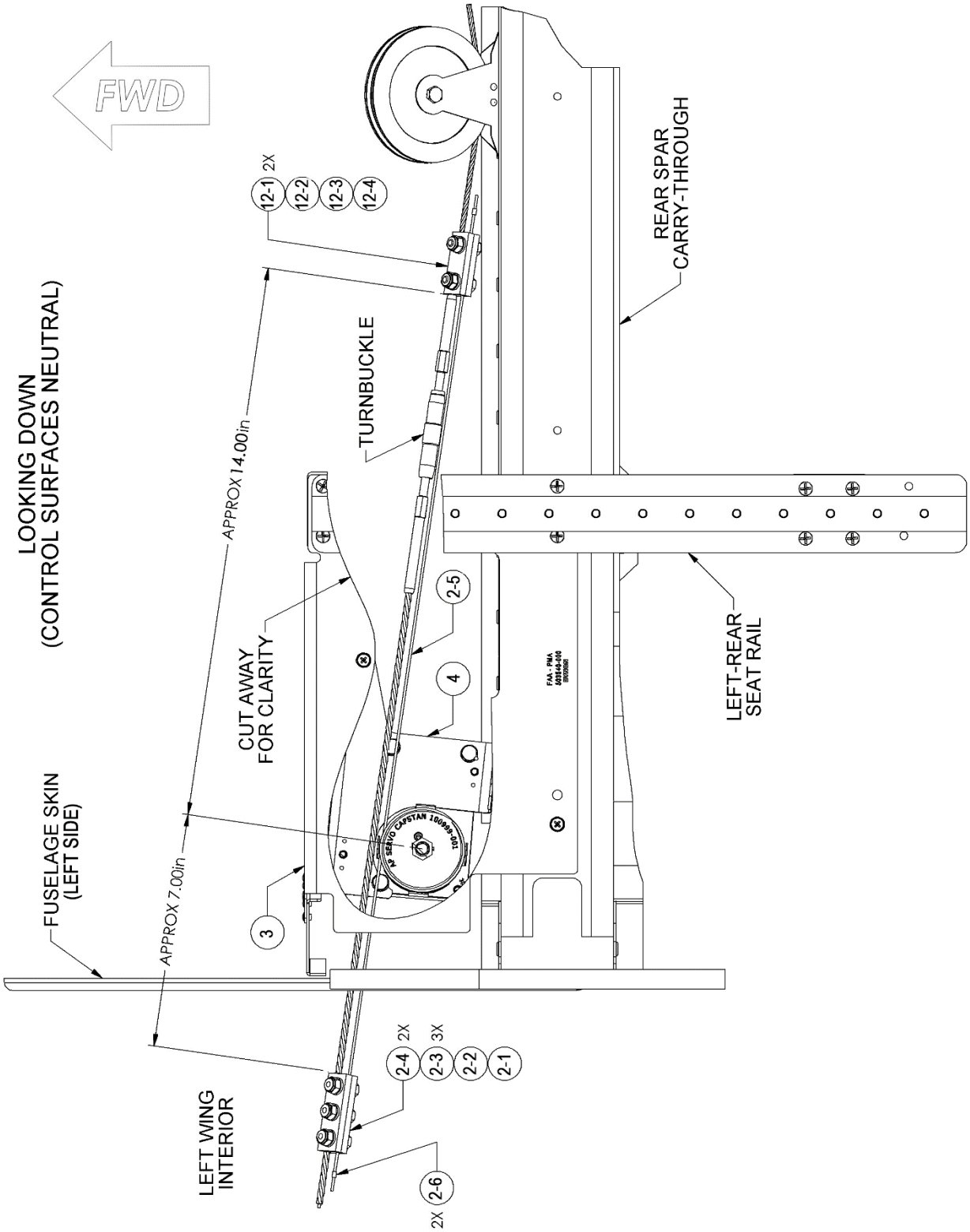

Figure 8: Roll Servo Bridal Cable Clamp—Location A

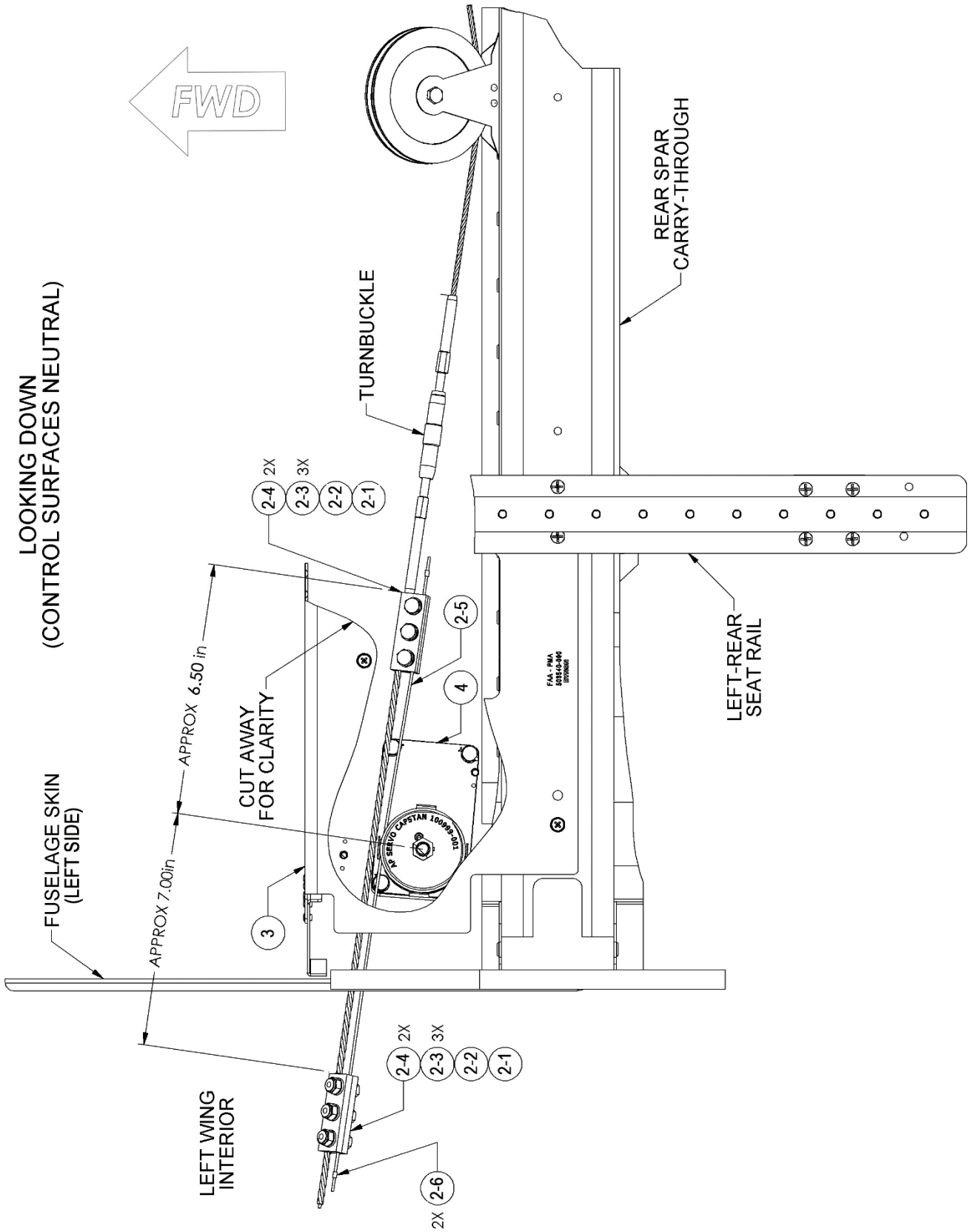

Figure 9: Roll Servo Bridal Cable Clamp—Location B

6.3 Pitch / Yaw Servo Parts and Assemblies

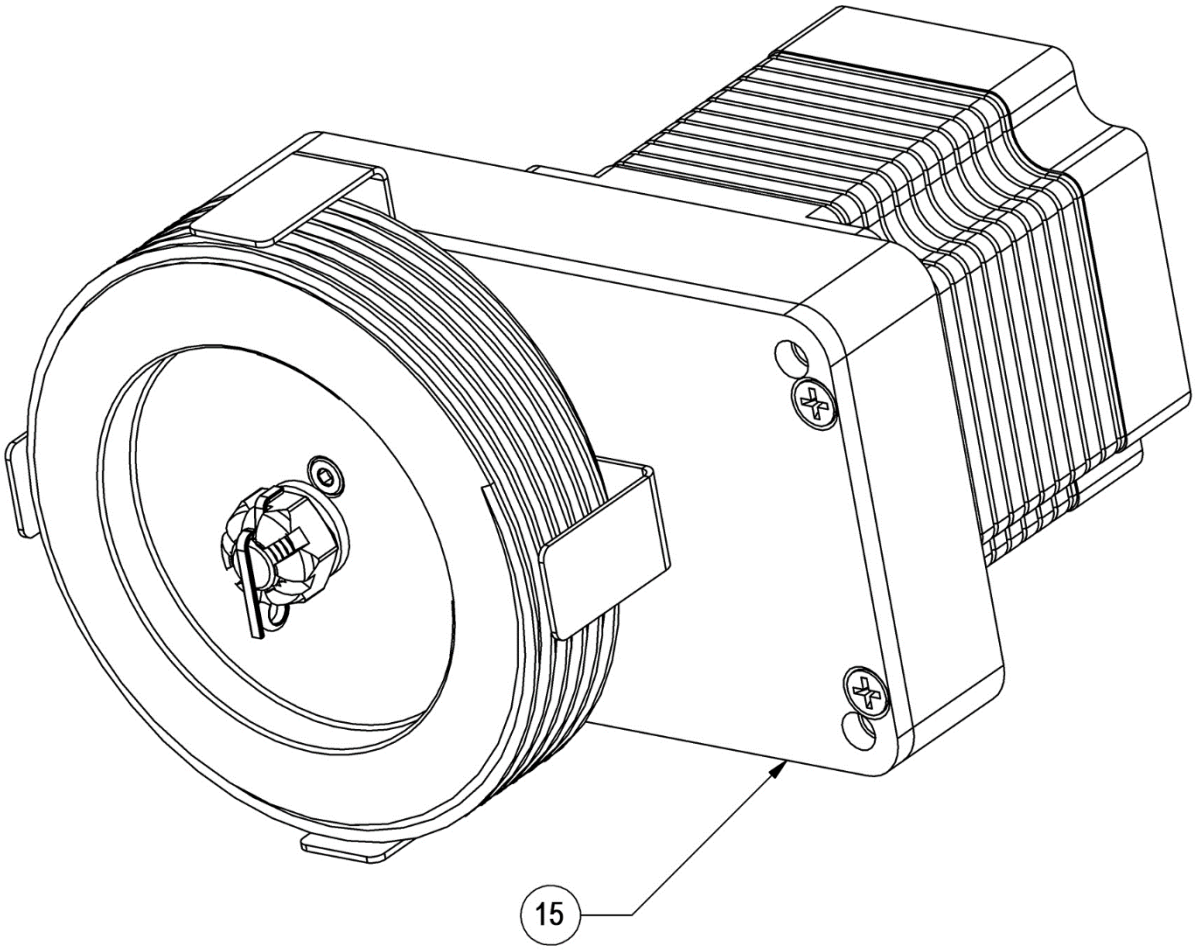

Figure 10: Dynon SV32C150 Pitch Servo Assembly

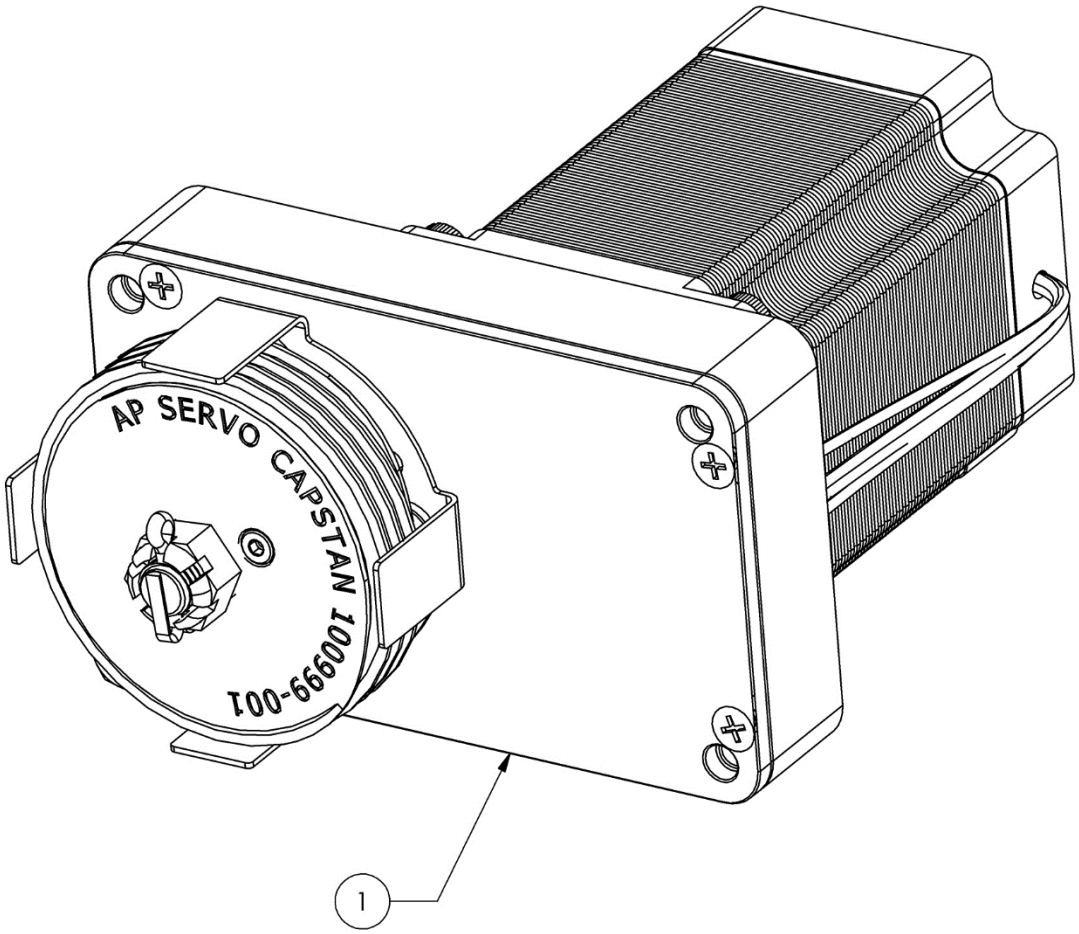

Figure 11: Dynon SV42C Yaw Servo Assembly

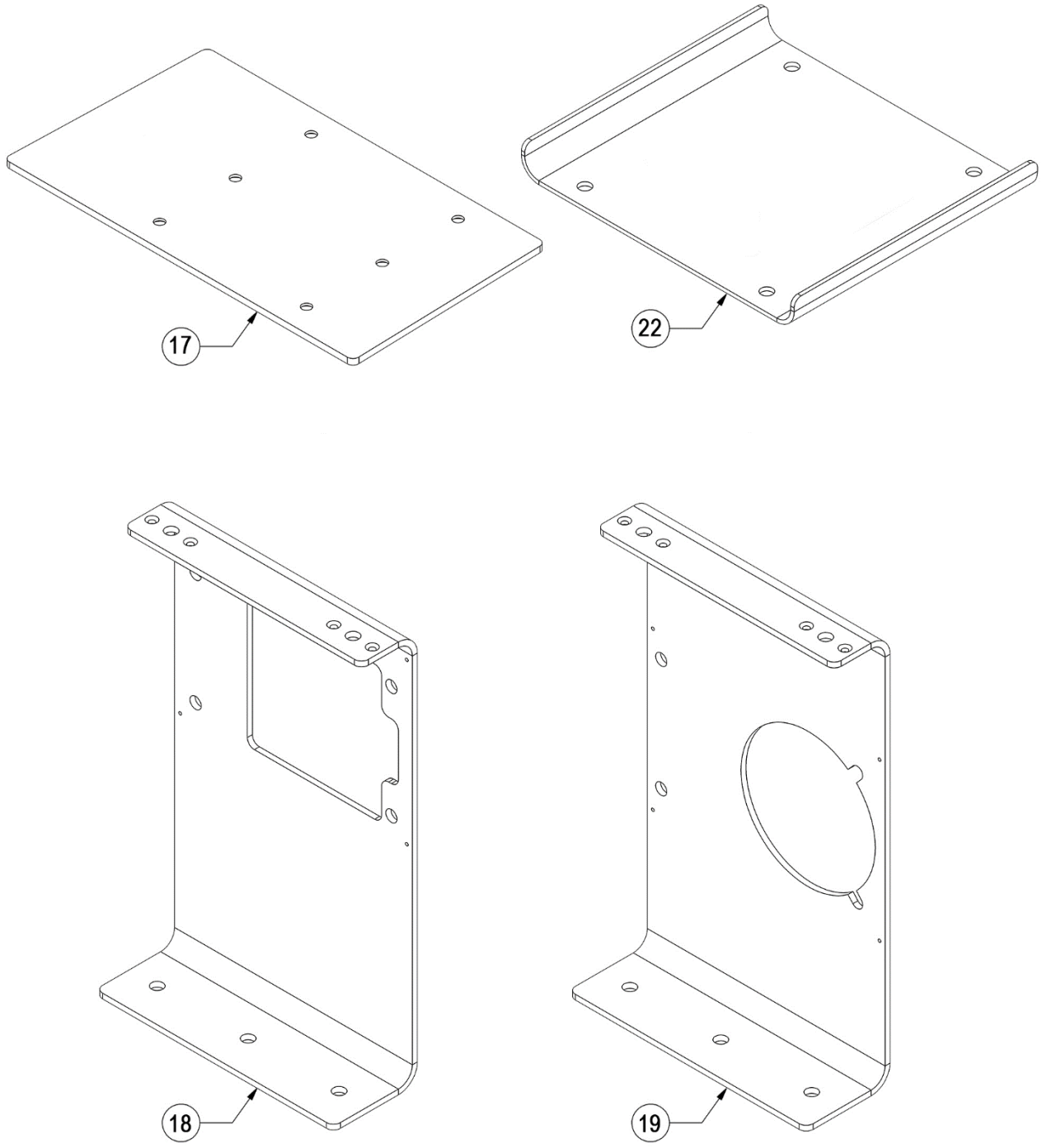

Figure 12: Pitch/Yaw Servo Mount Brackets

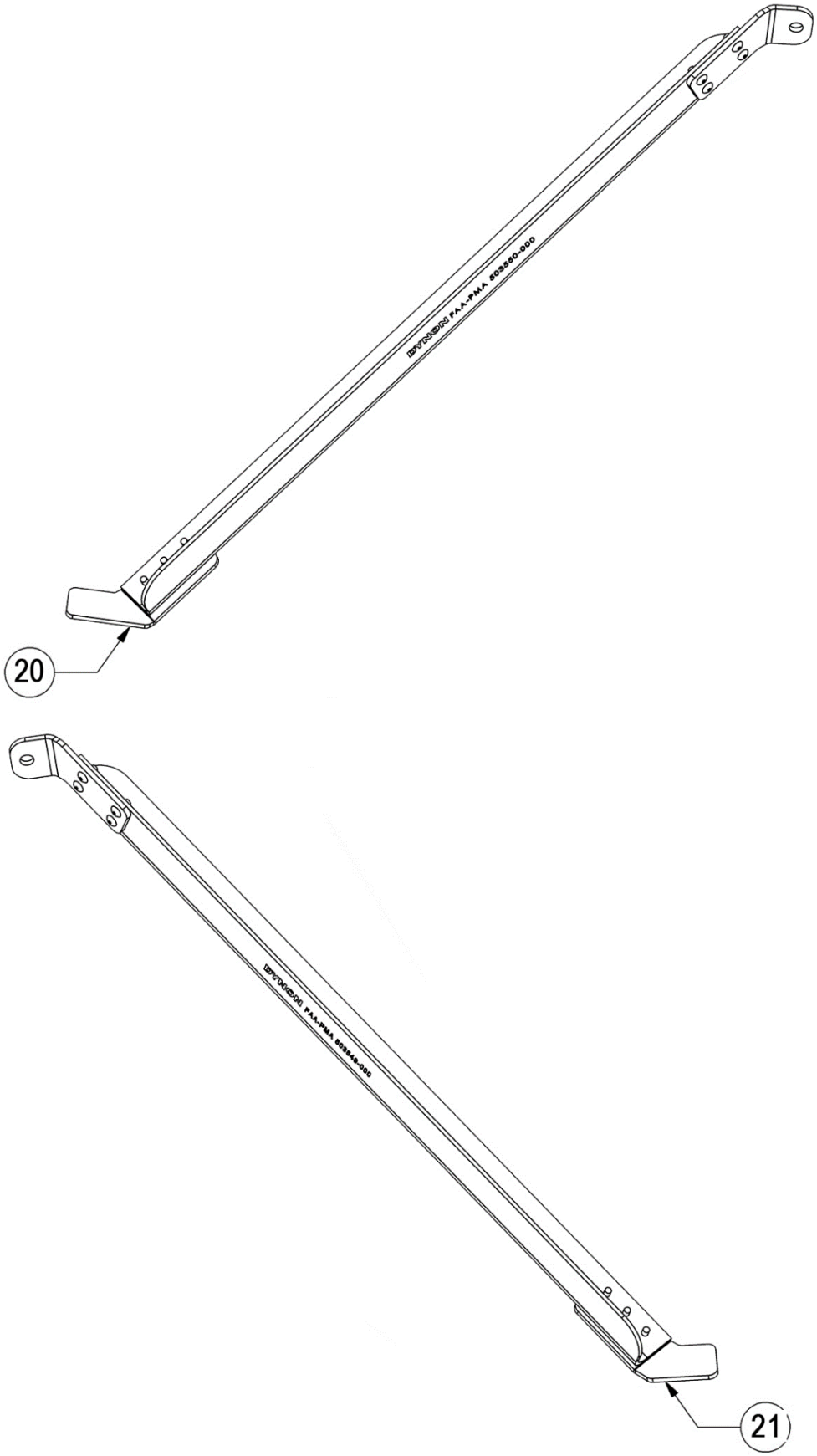

Figure 13: Pitch/Yaw Mounting Braces

6.4 Pitch / Yaw Servo Installation

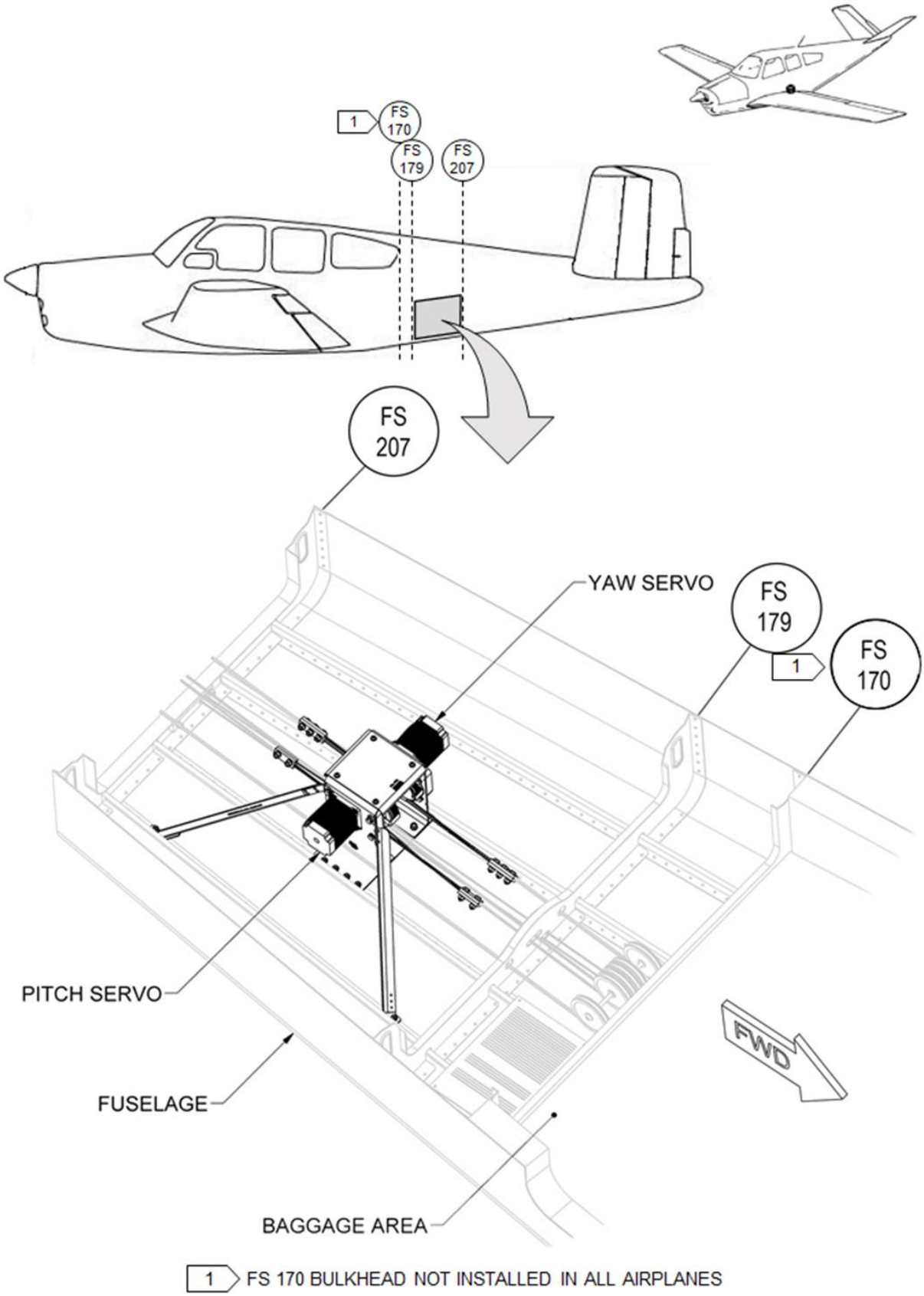

Figure 14: Pitch/Yaw Servo Mount Bracket Installation Location

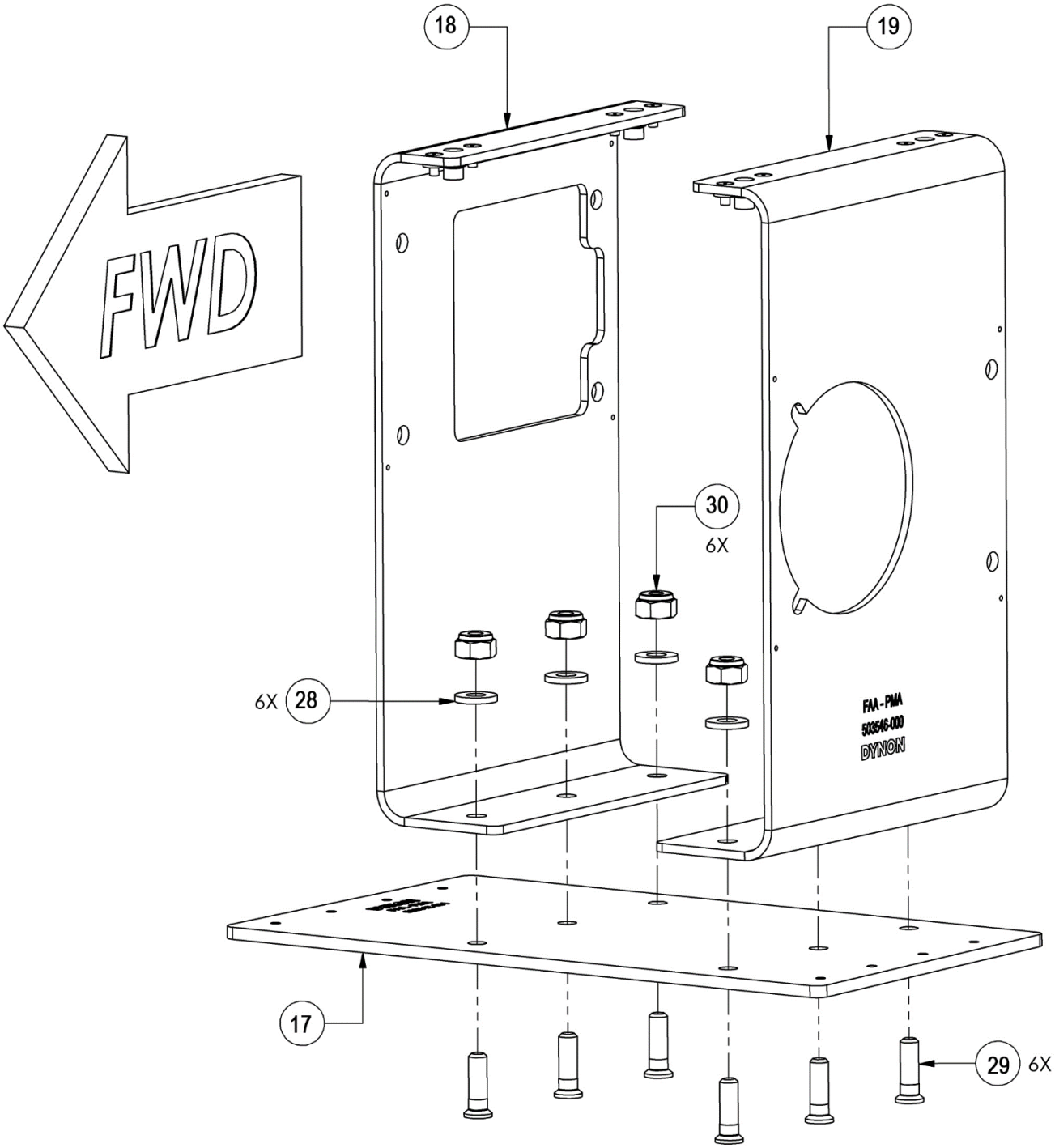

Figure 15 Pitch/Yaw Mount Bracket Assembly

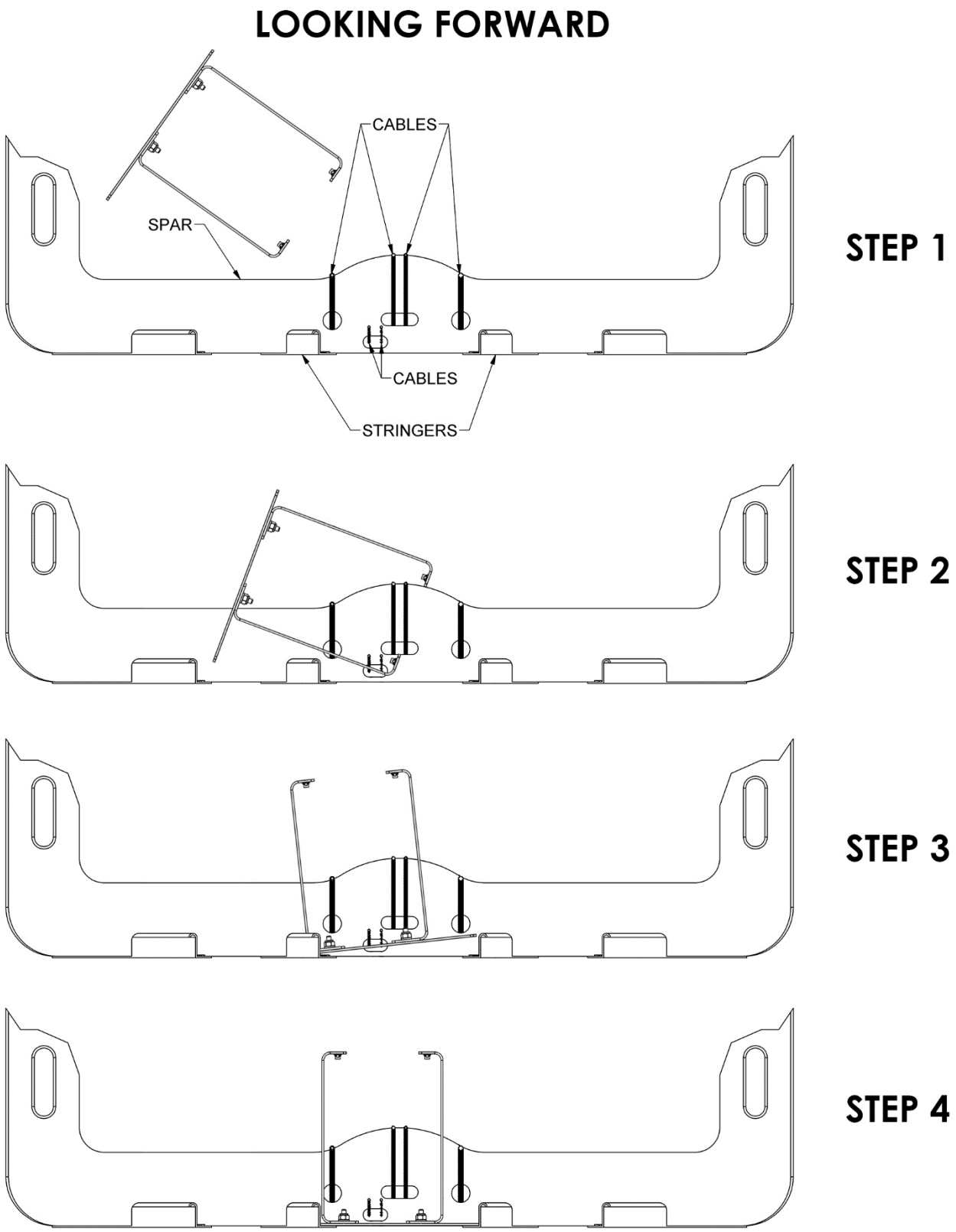

Figure 16 Pitch/Yaw Servo Mount Bracket—Lateral Position

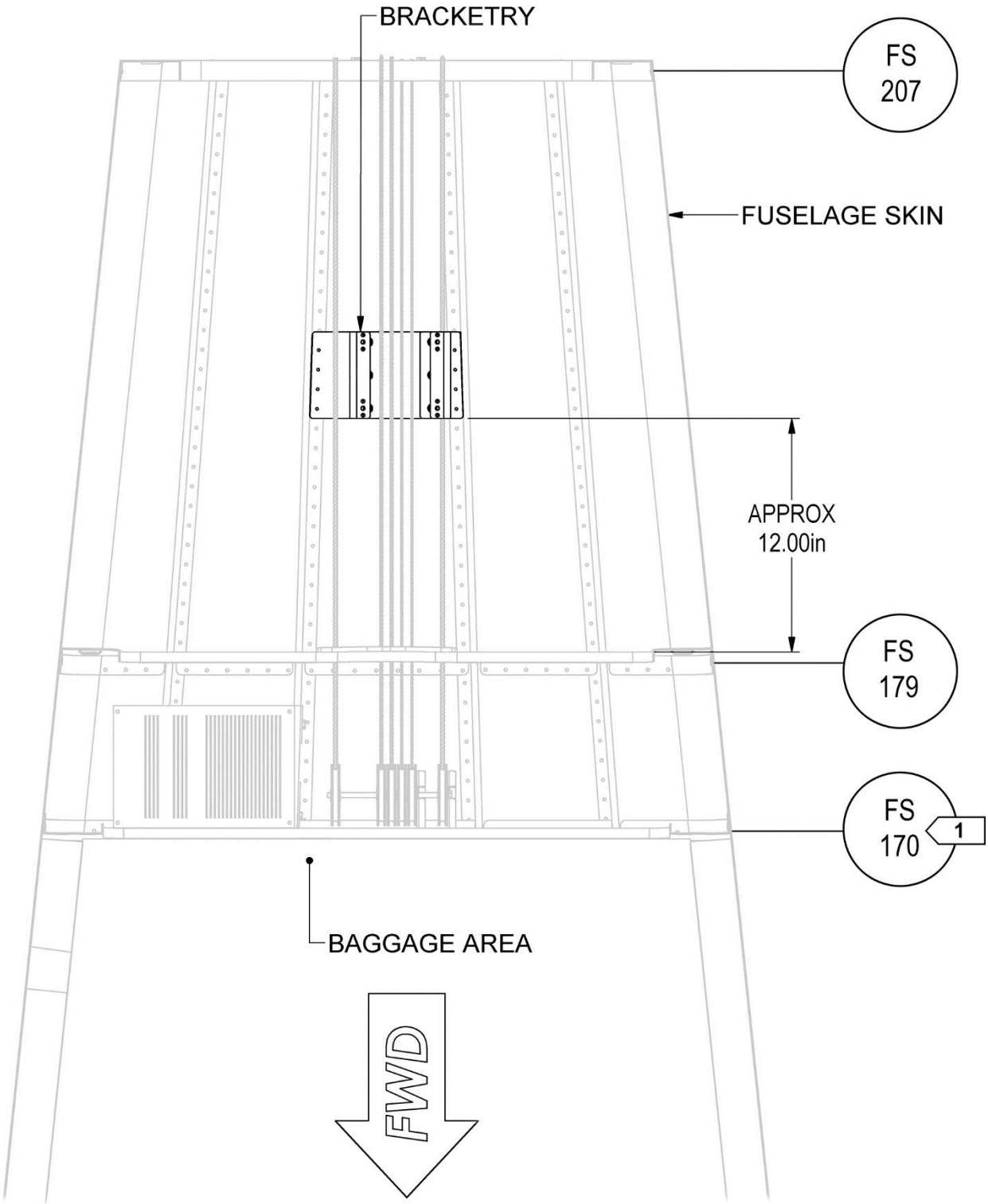

NOTE 1: FS 170 BULKHEAD MODELS NOT INSTALLED ON ALL AIRPLANES

Figure 17: Pitch/Yaw Servo Mount Bracket—Longitudinal Position

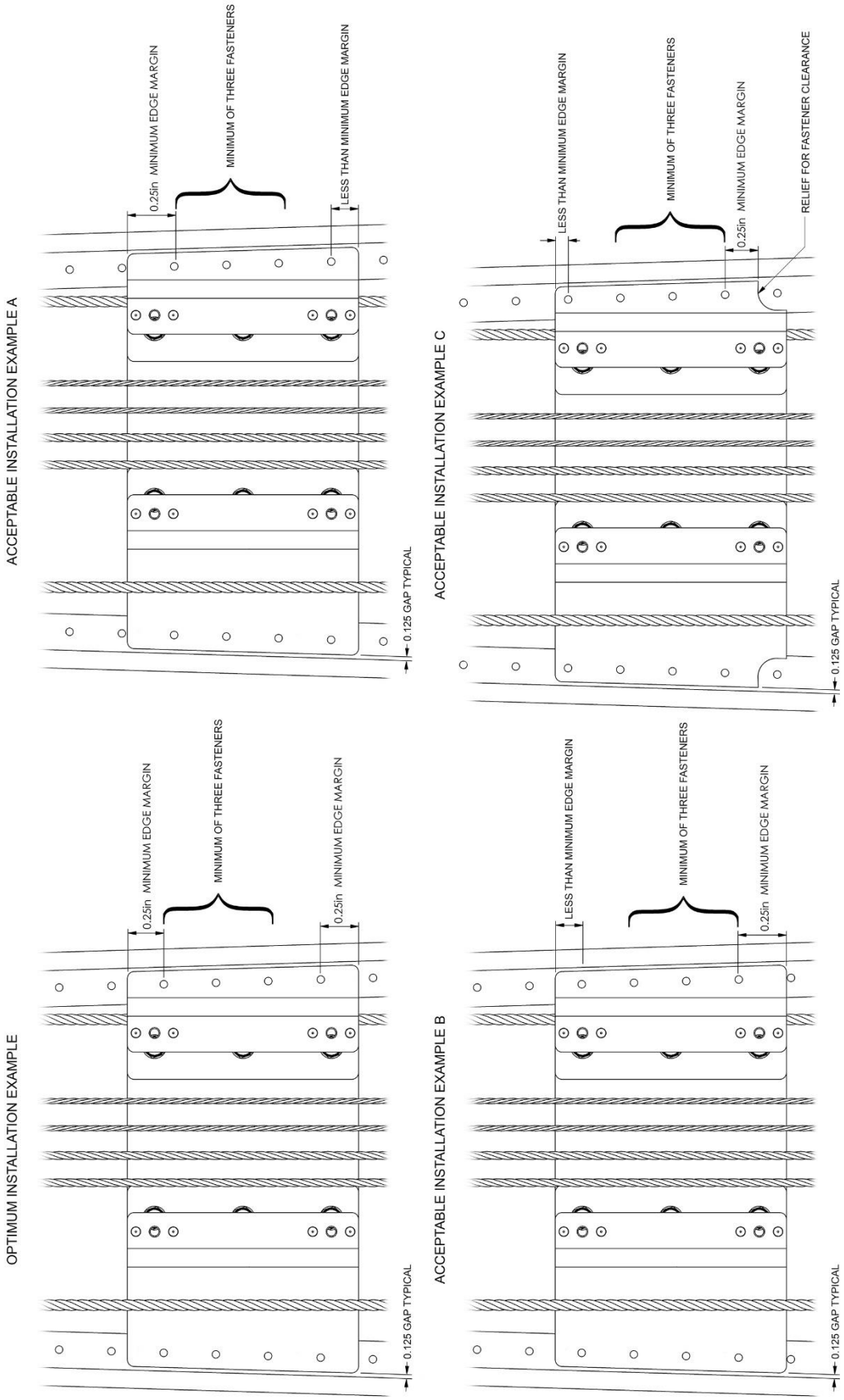

Figure 18 Pitch/Yaw Servo Mount Bracket Assembly Location Requirements

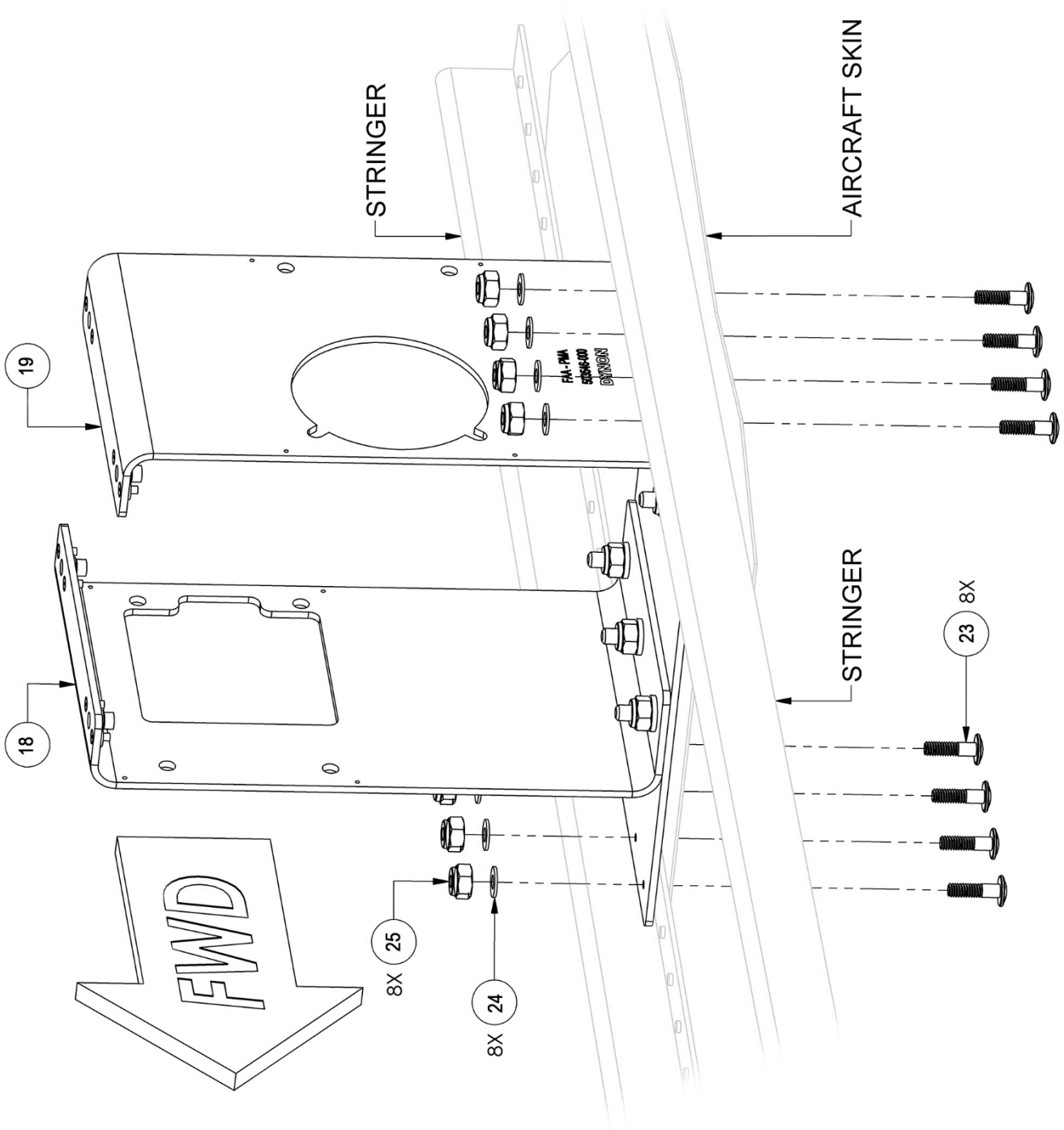

Figure 19 Pitch/Yaw Servo Mount Bracket Installation

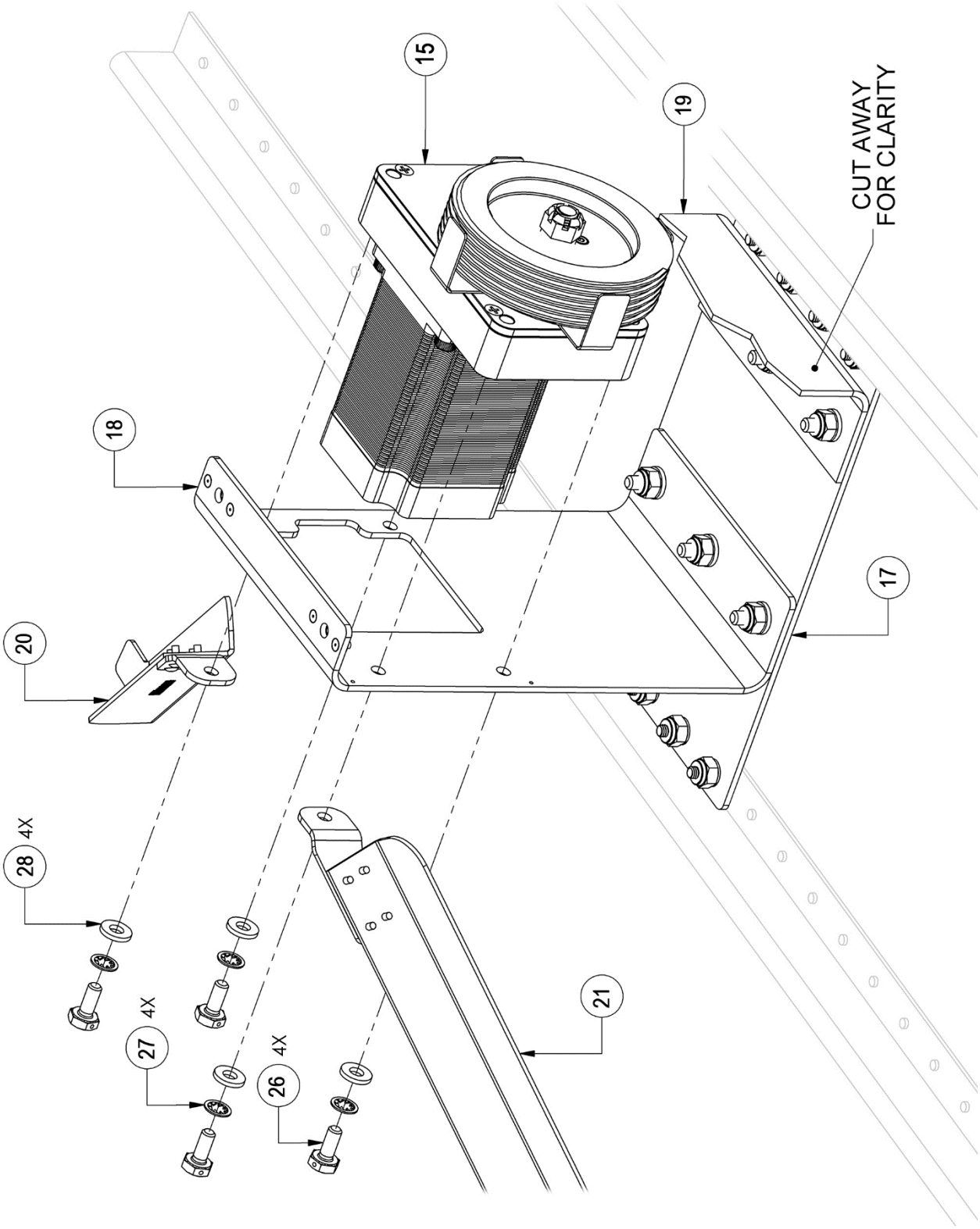

Figure 20: Pitch Servo Installation

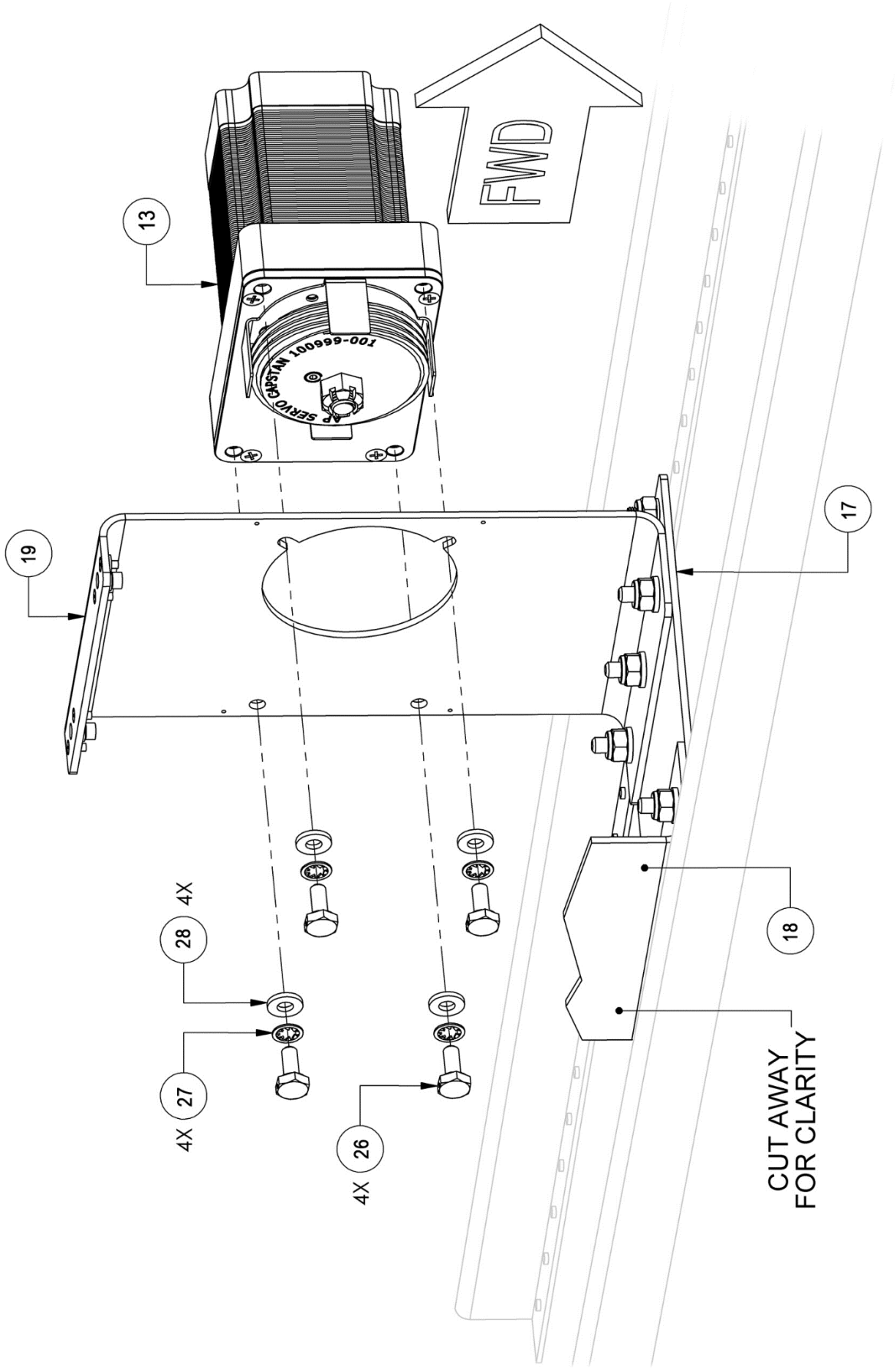

Figure 21 Yaw Servo Installation

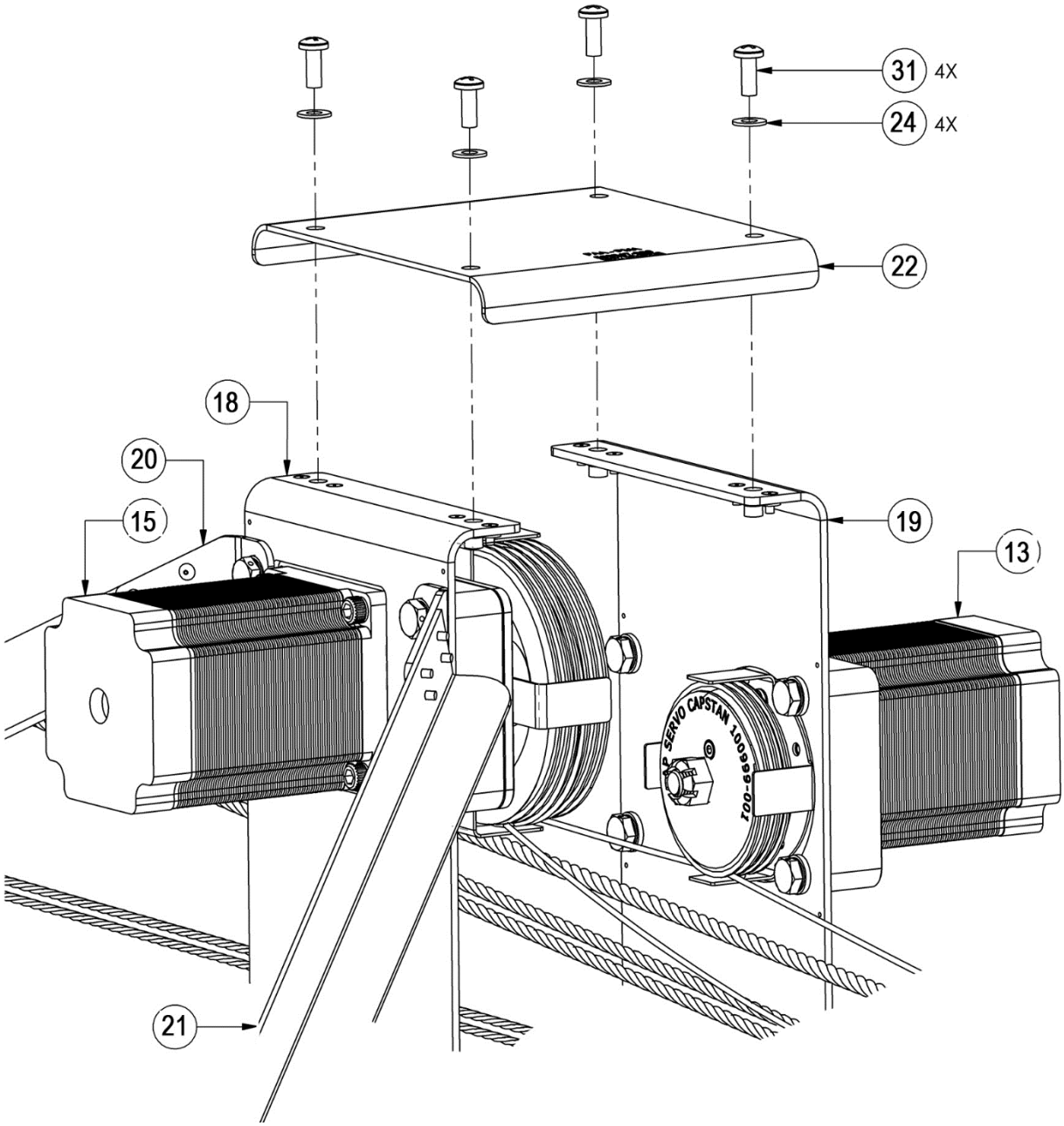

Figure 22: Pitch/Yaw Servo Mount Bracket Cap Installation

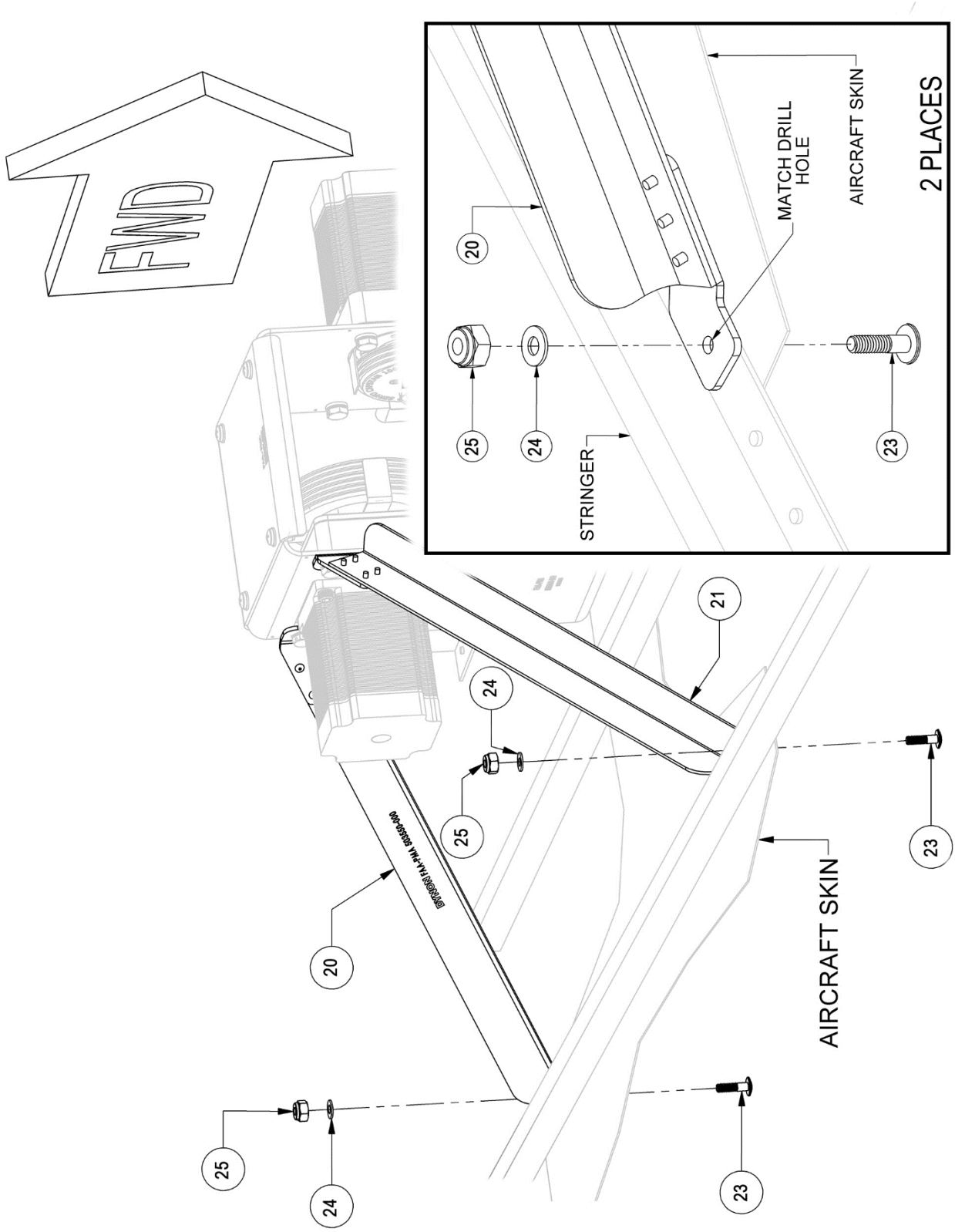

Figure 23: Pitch/Yaw Servo Mount Brace Installation

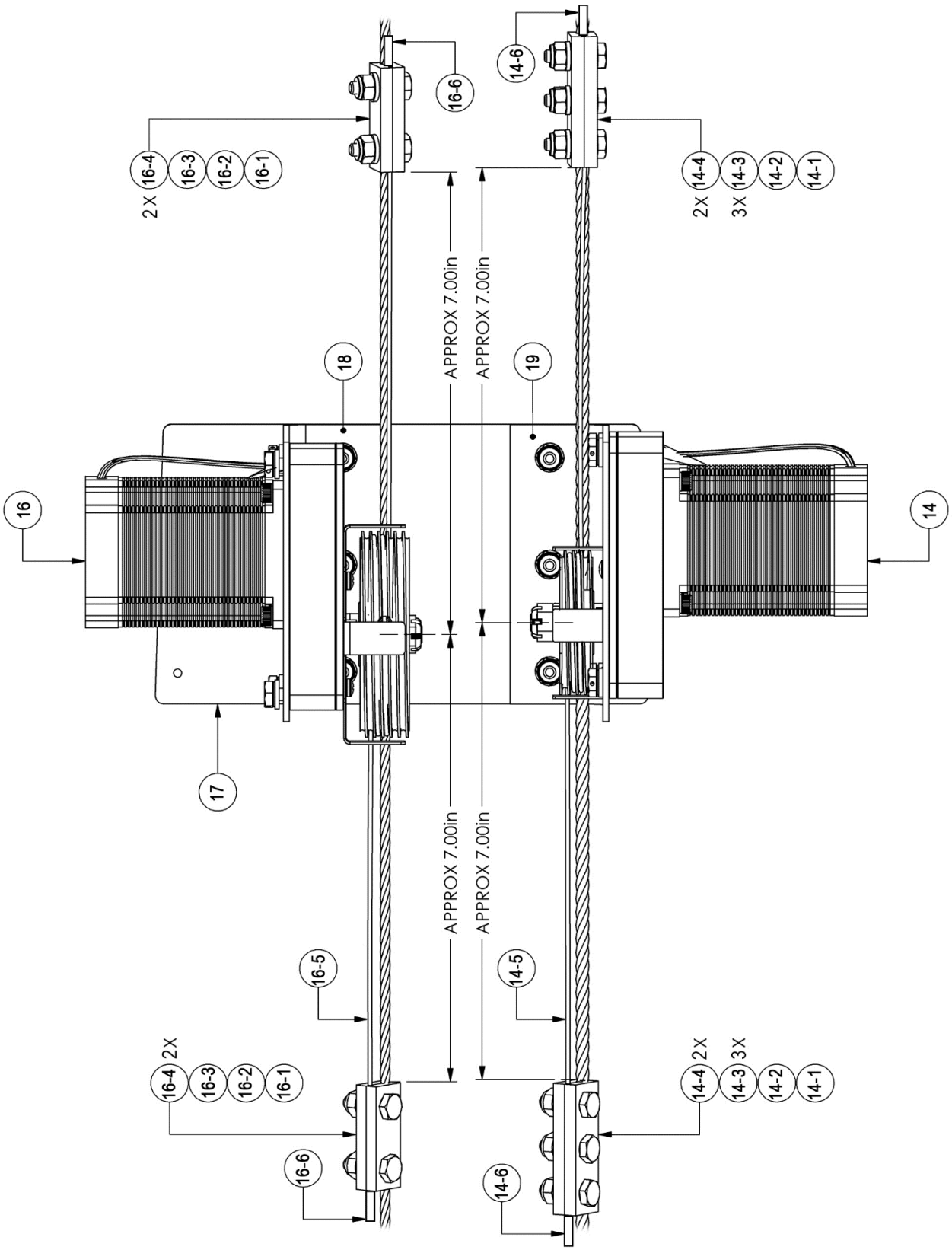

Figure 24 Pitch/Yaw Servo Bridal Cable Clamp Locations